ALPHA MICROSYSTEMS
RIGHT. FROM THE START

AM-190

AM-4000 Series CPU Board Installation Instructions

PDI-00190-00, Rev. A02

© 1995 Alpha Microsystems

REVISIONS INCORPORATED	
REVISION	DATE
A00	August 1993
A01	November 1993
A02	February 1994

AM-190 AM-4000 Series CPU Board Installation
To re-order this document, request part number PDI-00190-00.

The information contained in this manual is believed to be accurate and reliable. However, no responsibility for the accuracy, completeness or use of this information is assumed by Alpha Microsystems.

This document was written and illustrated by Dan Twaddell.

This document may contain references to products covered under U.S. Patent Number 4,530,048.

The following are registered trademarks of Alpha Microsystems, Santa Ana, CA 92799:

AMIGOS	AMOS	Alpha Micro	AlphaACCOUNTING
AlphaBASIC	AlphaCALC	AlphaCOBOL	AlphaFORTRAN 77
AlphaLAN	AlphaLEDGER	AlphaMAIL	AlphaMATE
AlphaNET	AlphaPASCAL	AlphaRJE	AlphaWRITE
CASELODE	OmniBASIC	VER-A-TEL	VIDEOTRAX

The following are trademarks of Alpha Microsystems, Santa Ana, CA 92799:

AlphaBASIC PLUS	AlphaVUE	AM-PC	AMTEC
DART	ESP	MULTI	inSight/am
inFront/am			

All other copyrights and trademarks are the property of their respective holders.

ALPHA MICROSYSTEMS
3511 Sunflower
P.O. Box 25059
Santa Ana, CA 92799

TABLE OF CONTENTS

1.0 INTRODUCTION 1

2.0 GENERAL PRODUCT DESCRIPTION 2
- 2.1 Features 2
- 2.2 Instruction and Data Cache Memory 3
- 2.3 Environmental Specifications 3
- 2.4 Power Specifications 4

3.0 MECHANICAL REQUIREMENTS 4

4.0 COMPATIBILITY 4
- 4.1 Software Compatibility 4
- 4.2 Hardware Compatibility 5
- 4.3 Unsupported Hardware 5
- 4.4 AM-190 SCSI Tape and Hard Disk Drive Requirements 6
- 4.5 SCSI-2 Dispatcher 9

5.0 UPGRADING AM-190 ON-BOARD MEMORY 9
- 5.1 Installing Memory 10
- 5.2 Installing the Boot PROM Module 11

6.0 CONFIGURING THE AM-190 BOARD 12
- 6.1 AM-190 Board and Jumper Definition Table 12
- 6.2 Using the AM-190's Two On-Board Serial I/O Ports 17
- 6.3 AM-190 Expansion I/O 18
- 6.4 Boot Device Setup (Main and Alternate) 18
- 6.5 High Performance Ethernet Port 19

7.0 ON-BOARD UPS MONITORING PORT 20

8.0 SERIAL UPS MONITORING 23

9.0 PREPARING FOR AN AM-190 UPGRADE 23
9.1 Protecting Your Data 24
9.2 Warm Boot Ability 24
9.3 Booting from a Floppy Drive 24
9.4 Upgrading Your AMOS Operating Software 25
9.5 Preparing to Boot the AM-190 Board 26
9.6 Network Initialization File 29
9.7 AM-190 Installation Checklist 29
9.8 Removing the Old CPU Board 30
9.9 Installing the Auxiliary Cooling Fan (Pedestal Chassis Only) 30

10.0 INSTALLING THE AM-190 BOARD (VME ONLY) 32

11.0 BOOTING THE NEW AM-190 BOARD 34

12.0 INITIAL SYSTEM TESTING 34

13.0 ADDITIONAL DOCUMENTATION 35

APPENDIX A - SCSI TERMINATION
A.1 SCSI TERMINATION USING EXTERNAL TERMINATOR OPTION . A-1
A.1.1 Termination Procedure (Without External Terminator) A-3
A.2 TERMINATOR POWER A-3

APPENDIX B - READ-AHEAD AND WRITE BUFFERING
B.1 INTRODUCTION B-1
B.2 READ AHEAD B-2
B.2.1 Controlling Read-Ahead B-2
B.3 WRITE BUFFERING B-3
B.3.1 Potential Pitfalls B-4
B.3.2 Setting Up Write Buffering B-4
B.4 FINAL NOTES B-5

APPENDIX C - PEDESTAL CHASSIS SINGLE BOARD AM-190 UPGRADE
C.1 INTRODUCTION C-1
C.2 REMOVING THE REAR PANEL C-1
C.3 REMOVING THE CPU BOARD C-2
C.3.1 Installing the New Front Panel Display Cable C-3
C.3.2 Installing the Auxiliary Cooling Fan C-4
C.3.3 Installing the AM-190 Mounting Brackets C-6
C.3.4 Installing the New 50-Pin SCSI Cable C-7
C.4 INSTALLING THE OPTIONAL 2-SLOT MOTHERBOARD C-8
C.5 INSTALLING THE AM-190 BOARD C-10
C.6 INSTALLING AN AM-520 BOARD C-12
C.7 INSTALLING THE AM-190 REAR PANEL C-14
C.7.1 Reconnecting Cables to the CPU C-15
C.8 FINISHING UP C-16

APPENDIX D - AM-990 SINGLE BOARD TO AM-190 UPGRADE

D.1 INTRODUCTION D-1
D.2 REMOVING YOUR OLD CPU BOARD D-1
D.2.1 Preparing to Install the AM190 Board D-6
D.2.2 Installing the New Enclosure D-9
D.2.3 Installing the AM-190 Board D-10
D.3 FINISHING UP D-12

1.0 INTRODUCTION

With a Motorola 68040 CPU clocked at 66MHz, on-board Ethernet controller, integral high performance SCSI-2 interface, dual serial I/O bus (supporting up to 58 ports), and a host of other new and enhanced features, the AM-190 (DWB-00190-XX) provides incredible power and extreme versatility.

All of the configurations shown below can be retrofitted with an AM-190 CPU board.

The AM-190 CPU board is available in both VME and single board versions.

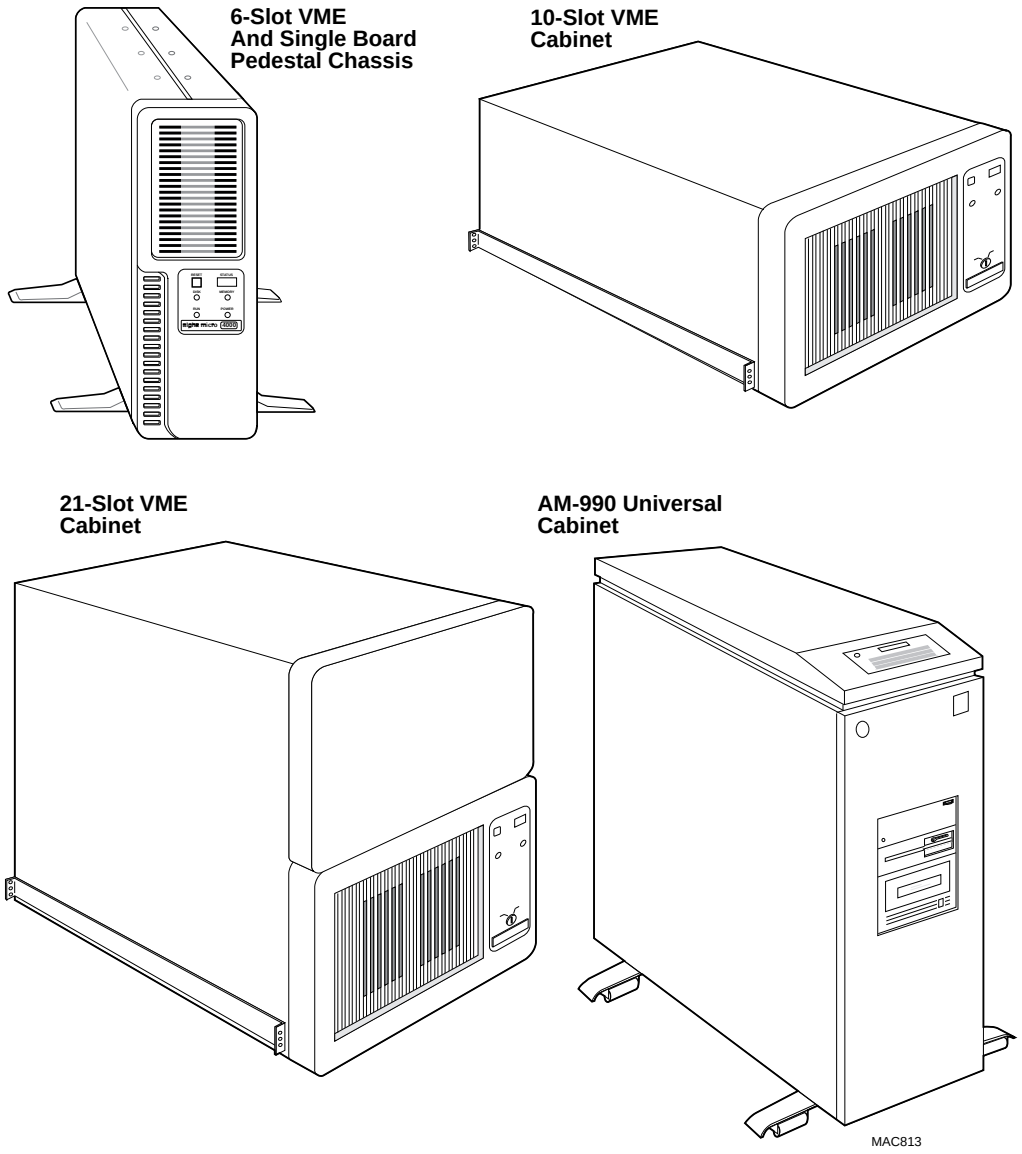

Figure 1. AM-190 Computer Configurations

2.0 GENERAL PRODUCT DESCRIPTION

This section outlines the AM-190 board's basic features and specifications.

2.1 Features

The basic features of the AM-190 are:

- 66MHz clock rate.
- 32-bit bidirectional data path.
- 32-bit address path.
- 4GB of direct memory addressability.
- Integral 68040 floating point coprocessor.
- On-board Virtual Personal Computer (optional).
- 128KB of external cache memory.
- 4KB of processor instruction cache memory.
- Enhanced power fail restart circuitry.
- Seven interrupt levels with vector capability.
- DMA channel capability.
- On-board bootstrap PROM containing several boot routines that enable you to change the I/O device the computer boots from. Also contains full power-up self-test of various system features.
- On-board programmable interval timer.
- On-board software security device (SSD).
- Available in both VME and single board configurations, using a common CPU board.
- Dual serial I/O expansion bus, supports up to 58 ports.
- On-board Ethernet controller with DMA.
- Time-of-day clock/calendar with settable seconds and battery back-up.

- Enhanced front panel status display interface.
- Remote reset capability.
- Two RS-232/422 serial I/O ports.
- On-board high performance SCSI-2 expansion interface.
- Four on-board (SIMM) **s**ingle **i**nline **m**emory **m**odule expansion slots, which support 60ns DRAMs for up to 128MB of memory.
- On-board UPS (**u**ninterruptible **p**ower **s**ource) switch contact interface monitoring port.

2.2 Instruction and Data Cache Memory

The instructions and data used within each computer program have a high probability of being used repeatedly within a very short time. To take advantage of this probability and to decrease retrieval time, the AM-190 CPU board contains an external instruction and data cache, in addition to the 68040 internal cache.

The memory cache built into the AM-190 CPU stores 128KB of data organized as 32,768 entries, each containing a block of 4 bytes. The CPU fills the cache entries one long word at a time.

The cache improves the overall performance of the system by reducing the number of clock cycles required by the processor to fetch information from memory, and by increasing the bus bandwidth available for other bus masters in the system. During a write cycle, the cache circuitry writes data to a cached data item as well as to the item in memory, maintaining consistency between the data in cache and the data in memory.

When the computer boots, the cache on the AM-190 board is automatically enabled. If you have an application that requires you to disable the cache, the cache disabling command CBDS can be entered at AMOS command level. To re-enable the cache, simply enter the command CBEN.

2.3 Environmental Specifications

CPU operating frequency	66MHz
Computer operating temperature external	60 to 80 degrees F (16 to 27 degrees C)
Humidity	10% to 90% (non-condensing)

2.4 Power Specifications

DC power requirements (maximum):

Voltage	Current Draw
+5 volts	6.3 A
+12 volts	25 ma
-12 volts	25 ma

3.0 MECHANICAL REQUIREMENTS

The AM-190 CPU board operates on a standard Alpha Micro VMEbus terminated with 330 ohms to +5 volts and 470 ohms to ground. It is also available in non-VME single board configurations.

The AM-190 contains two serial I/O ports, numbered 0 and 1; one 15-pin Ethernet port; and one 9-pin UPS monitoring port. Additional terminals and printers can be attached to your computer system by means of optional I/O controllers and paddleboards.

The AM-190 board is mechanically compatible with all of the computer enclosures shown in Figure 1.

4.0 COMPATIBILITY

The next two sections on AM-190 hardware and software compatibility are important and should be carefully read before proceeding with your installation.

4.1 Software Compatibility

For information on third party software compatibility, see the AM-4000 SIG (Special Interest Group) located on Alpha Micro's online AMTEC+. The AM-4000 SIG is also a valuable source of other AM-4000 related information.

To be AM-190 compatible, your operating system can be no earlier than AMOS 1.4C or AMOS 2.2C. You must also use a version of the hardware support software release designed specifically for use with the above mentioned operating systems.

Because the AM-190 has a number of features not found in earlier Alpha Micro CPU boards, you should not attempt to use the board with versions of AMOS earlier than 1.4C or 2.2C; earlier versions of the operating system simply will not work.

4.2 Hardware Compatibility

To be compatible with the AM-190 CPU board, other circuit boards in your computer need to be at certain minimum revision levels. The following is a list of all the boards compatible with the AM-190, along with their minimum acceptable revision levels:

Controller Boards

1. AM-350(-00) Serial I/O controller	Revision A08/C02
2. AM-350(-01) Serial I/O controller	Revision C04
3. AM-515-10 Mag. tape cntrl.	Revision A09/C04/D06
4. AM-520 disk controller	Revision A13
5. AM-520-10 disk controller	Revision A05
6. AM-630 VCR controller	Revision B07/C05
7. AM-640 magnetic tape	Revision B01
8. AM-214 floppy controller	Revision A03

AM-355 I/O Bus Compatible Paddle Boards

1. AM-333 RJE paddle boards	Revision A00
2. AM-355 6-port serial I/O boards	Revision A00/B00
3. AM-358 8-port serial I/O boards	Revision C01
4. AM-324 parallel printer board	Revision A08

Configurations where the power supply is operating at maximum load may require the use of B03 or later AM-355 I/O cards. The later revision AM-355 boards have CMOS parts with reduced current requirements.

4.3 Unsupported Hardware

The following products are not supported for use with Alpha Micro's AM-190 CPU board:

1. AM-117-90 S-100 bus adaptor.
2. AM-182 cache board.

3. AM-330-90 communications controller.

4. AM-353 synchronous I/O boards

5. AM-415 disk controller.

6. AM-730 and AM-740 memory boards.

7. AM-515 intelligent SCSI controller.

8. AM-362 and AM-340 Ethernet controllers.

9. AM-212 floppy controller.

4.4 AM-190 SCSI Tape and Hard Disk Drive Requirements

The AM-190 has an on-board high performance SCSI interface incorporated into its design. To insure a successful installation, you should carefully read the next few sections dealing with SCSI peripherals and AM-190 compatibility.

The AM-190's on-board high performance SCSI interface supports both SCSI-1 and SCSI-2 hard disk and magnetic tape devices. However, because of the tremendous potential increase in performance, we highly recommend the use of SCSI peripherals that support SCSI-2.

Tandberg 1/4" Streaming Tape Drives

In order to warm boot from a Tandberg streaming tape drive, it must be set to SCSI ID #6.

1. In order to be AM-190 compatible, the AM-625 Tandberg 150MB tape drive must have firmware at **revision -06:00 or later**. The AM-625 is a SCSI-1 device; it cannot be upgraded to SCSI-2. AM-625 backups are not able to span tapes.

2. AM-626 525MB Tandberg SCSI tape drives can be upgraded to SCSI-2 by installing updated firmware (part number PDB-00626-90), which is supplied with your AM-190 CPU board. If you do not upgrade the firmware, the drive can still be used on the AM-190 board as a SCSI-1 device, but only if it has firmware at **revision -04:08 or later.**

   To install the firmware PROM, you simply remove the two TORX screws holding the drive's top cover in place; lift off the top cover; gently pry out the old PROM; and install the new PROM. Figure 2 shows the location of the AM-626's firmware PROM:

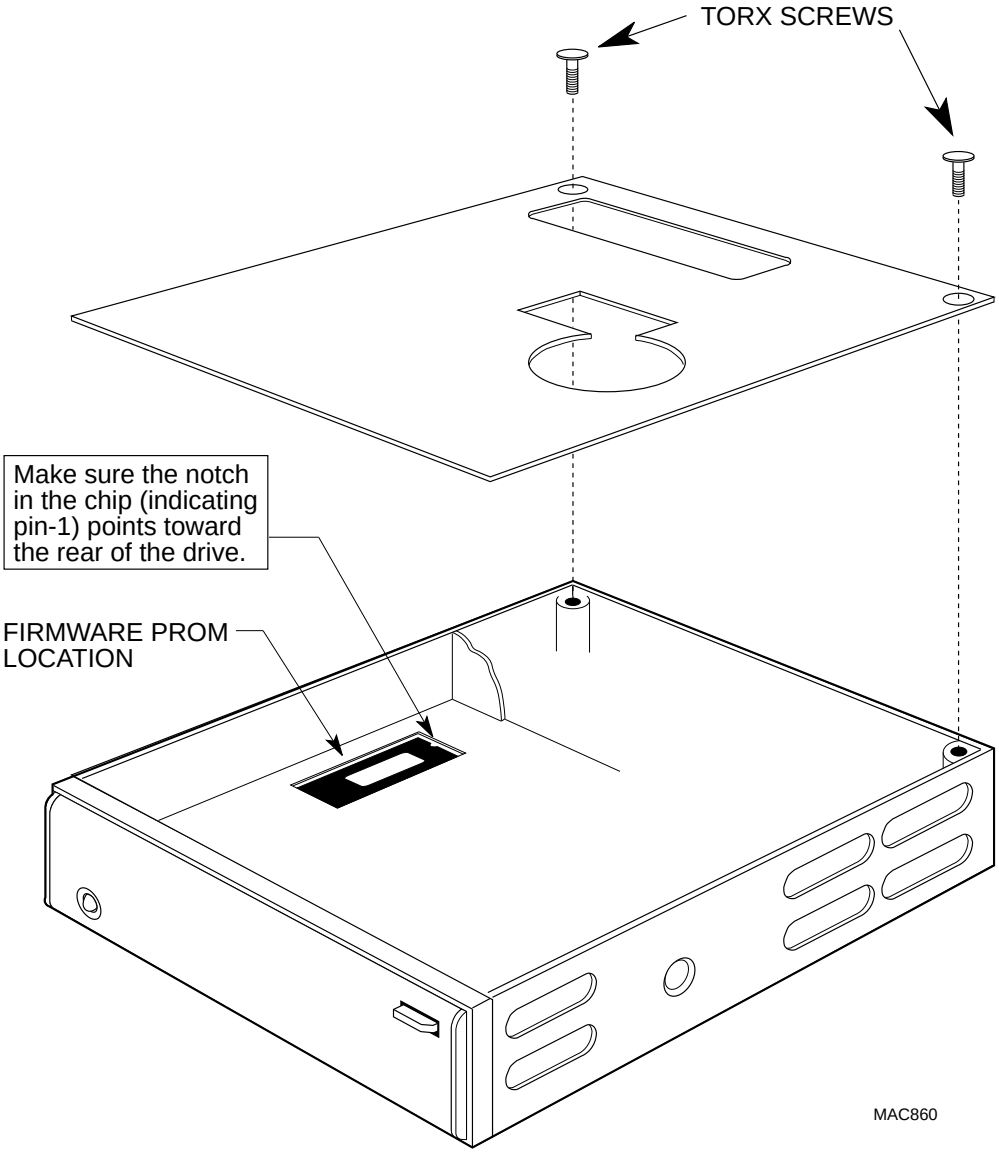

Figure 2. AM-626 PROM Installation

3. AM-627 1GB Tandberg SCSI tape drives also require a firmware update to be SCSI-2 compatible. However, these drives use a flash ROM for their firmware, which can be updated without removing the drive from the computer.

   Once the computer has completed booting, enter the following commands to update the tape drive firmware for SCSI-2 operation:

   `LOG OPR:` RETURN
   `FWUPD DVR:TSCZ2` RETURN

The program will prompt you for the name of the device, enter:

```
STR0: RETURN
```

The firmware on the tape drive will automatically be updated for SCSI-2 operation; it takes about one minute and the AMOS prompt will re-appear. In order for the firmware update to take affect, you must power the computer down and then turn the power on again. With the computer up and running, your AM-627 tape drive will now be SCSI-2 compatible.

Once the firmware has been updated, the drive is only compatible with the AM-190 board. If the drive is ever used in a configuration with an earlier style CPU board, the firmware must be converted back. To convert back to SCSI-1, follow the same procedure outlined above, but enter the command:

```
FWUPD DVR:TSCZ1 RETURN
```

AM-645 8mm Magnetic Tape Subsystem

In order for the Exabyte tape drive to work with the AM-190 board, new firmware must be installed in the drive. The updated firmware is available from Alpha Micro under part number PDB-00645-90. Once the new firmware is installed, the Exabyte tape drive will operate in SCSI-1 mode only. The ability to span tapes is not supported on the Exabyte tape drive.

AM-647 DAT Magnetic Tape Subsystem

The DAT tape drive is SCSI-2 ready and does not require any firmware updates to be compatible with the AM-190 board. However, on the back of the DAT drive a change needs to be made to one of the configuration switches. Switch S4 needs to be placed in the "ON" position in order for the drive to operate in SCSI-2 mode.

After making a configuration switch change, you must turn the drive off and then power the drive back on in order for the switch change to take affect.

SCSI Hard Disk Drives

If you included a Maxtor MXT Series SCSI disk drive along with your AM-190 upgrade order, the drive may have been loaded with a bootable copy of AM-4000 compatible AMOS software. If this is the case, the drive will be clearly labeled indicating how it was configured. Also, a special notice will accompany the drive, detailing exactly what software has been copied to the drive.

Both SCSI-1 and SCSI-2 disk drives are supported on the AM-190's high performance SCSI port. However, while SCSI-1 drives are compatible, the performance yield is significantly less than the SCSI-2 compatible MXT series disk drives. Also in order to be compatible with the AM-190 board, your MXT drive must have a sticker indicating it has special 6F+ firmware or it must be using 1.5 or later production firmware.

Under AMOS 2.2 (or later) operating systems, you can divide your hard disk drive into logical splits larger than 32MB. In fact, you could take a 540MB drive and make it one giant 540MB logical. While this is perfectly acceptable, you may get a memory allocation error when running programs that load a copy of the bitmap into your memory partition—e.g., DSKANA and MONTST. To use these types of programs, you will need at least one job on your computer with enough memory allocated to allow you to load the large bitmap. Depending on the size of the logical device, you may need a memory partition between 100 and 800KB.

There is an optional read-ahead and write buffering feature you can enable to enhance the performance of SCSI hard disk drives connected to the AM-190. This feature is described in Appendix B.

4.5 SCSI-2 Dispatcher

In order to use the AM-190's on-board high performance SCSI controller, you must define something called the "SCSI Dispatcher" in your system initialization command file. AMOS uses the dispatcher to communicate with the SCSI controller chip. All communications with the SCSI controller chip are handled by the dispatcher.

There are two versions of the SCSI dispatcher. SCZ190.SYS is a high performance SSD protected version of the SCSI dispatcher, which supports command queueing, synchronous transfers, multi-threaded, and scatter-gather operations. SIM190.SYS is a simplified version of the SCSI dispatcher, which is not SSD protected and does not support the high performance features supported in SCZ190.SYS. SIM190.SYS is used when making warm boot tapes and for temporary situations with computers which do not have an SSD chip. While both of these dispatchers support SCSI-2 devices, there is a tremendous performance increase using the SCZ190.SYS dispatcher.

See Section 9.5 for information on how to install the SCSI dispatcher and enter its SSD PIC code.

If you have any SCSI peripherals attached to the AM-190's SCSI port, you must define the dispatcher, regardless of whether you are using SCSI-1 or SCSI-2 peripheral devices.

5.0 UPGRADING AM-190 ON-BOARD MEMORY

The AM-190 has four on-board SIMM (single inline memory module) expansion slots, which support 60ns DRAMs. Because the memory is located on-board, it can be accessed much faster than memory accessed over the VME bus—i.e., AM-730 and AM-740 memory boards used with earlier CPU boards. Because of the performance difference, AM-730 and AM-740 memory boards are not supported with the AM-190 CPU board.

SIMM expansion memory is sold individually under the following part numbers:

Part Number	Capacity
PDB-00716-00	4MB
PDB-00716-20	16MB
PDB-00716-30	32MB

5.1 Installing Memory

Using Figure 4 as a reference, SIMM modules are plugged into the AM-190 board at locations J13, J14, J15, and J16. The first SIMM module will be installed in location J13; the second (if applicable) will be installed in location J14; the third (if applicable) will be installed in location J15; the fourth (if applicable) will be installed in location J16.

You can mix SIMM modules of various capacities by installing the largest capacity SIMMS first, followed by the smaller capacity SIMMS. If you were going to install one 4MB SIMM, one 16MB SIMM, and one 32MB SIMM, the 32MB SIMM would be installed first at location J13; the 16MB SIMM would be installed second at location J14; the 4MB SIMM would be installed last at location J15.

Special care must be taken when installing a SIMM module. Figure 3 shows how the curve in the SIMM module must align with pin-1 on the AM-190's SIMM connector.

The SIMM must be inserted into the connector at a slight angle and after you feel the SIMM module settle into the connector, you rotate the SIMM into an upright position, as shown in Figure 3. When the SIMM is properly positioned, the metal retainer clips will click into position, locking the SIMM in place.

Very little force is required to install a SIMM module. If you're having problems getting the SIMM module installed in the socket, stop and take a moment to examine both the SIMM module and the socket. Make sure you are installing the SIMM as shown in Figure 3.

Located adjacent to the UPS switch contact port on the AM-190 board is the memory configuration LED. This LED is visible through a small hole in the AM-190's rear panel adapter. When memory is correctly configured, the LED will remain lit. If the AM-190's memory is incorrectly configured, the memory configuration LED will not be lit and a flashing "20" will appear on the computer's front panel display.

Once the memory is installed, it is ready to be used; **no jumpers need to be set** and **no software needs to be reconfigured or modified**. As soon as you turn on your computer, the AMOS operating system will automatically make the memory available.

To remove a SIMM from its connector, simply press out on the metal retainer clips and gently tilt the top of the SIMM module, so it is free of the metal retainer clips.

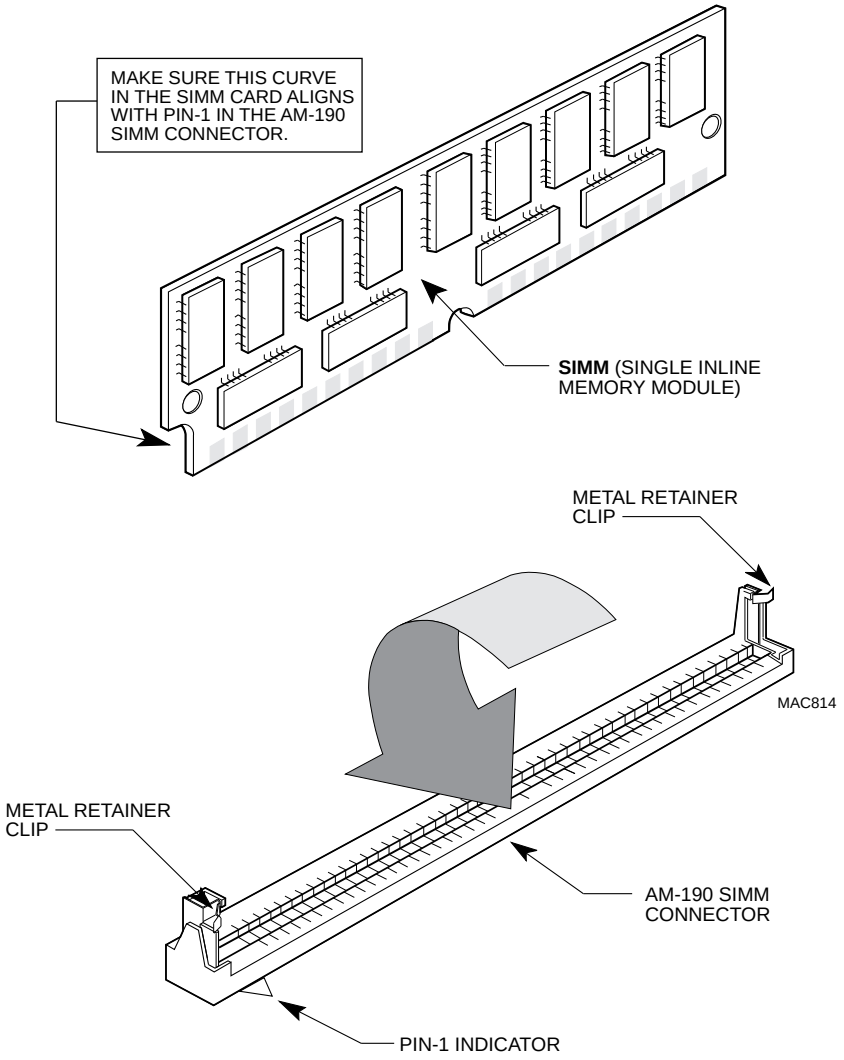

Figure 3. AM-190 SIMM Module Installation

5.2 Installing the Boot PROM Module

The AM-191 boot PROM module is very similiar to the memory modules described in the previous section. However, it is very important that you not attempt to install the boot PROM module in one of the memory SIMM connectors (J13, J14, J15, and J16), and you should not attempt to plug memory SIMMs into the J17 connector, which is designed for the boot PROM module.

The installation of the boot PROM module is the same as described for memory modules. The boot PROM module inserts into the J17 connector at a slight angle and then rotates into the upright position. Make sure pin-1 on the boot PROM module aligns with pin-1 on the J17 connector. When properly installed, the components on the boot PROM module will be facing in toward the center of the AM-190 board.

6.0 CONFIGURING THE AM-190 BOARD

Your AM-190 board has been factory tested and shipped with its configuration jumpers set in their standard "default" positions. There are actually only two areas on the board which may require changes in jumper settings:

1. The RS-232/RS-422 serial port configuration jumpers.

2. The "Remote Reset" jumper.

Serial Port Configuration Jumpers

Three jumpers on the AM-190 CPU board select RS-232 or RS-422 protocol for the TXDx, RXD+, and RXD- lines of each serial I/O port. Jumpers W1, W3, and W5 control port 0. Port 1 is controlled by jumpers W2, W4, and W6. Figure 4 shows the jumpers for both serial ports set to the RS-232 position. To change a port to RS-422 operation, simply move all three jumpers to the RS-422 position.

Within each group, you must set all three jumpers to the same protocol. You **cannot** set (for example) W1 to RS-422 for the TXDx line, and jumpers W3 and W5 to RS-232 for RXD+ and RXD-. You can, however, set the jumpers for port 0 to RS-232 and those for port 1 to RS-422, or vice-versa.

Figure 5 shows pinout information for RS-422/232 serial port configurations.

Remote Reset

The remote reset option, which allows you to reset your computer from a remote (terminal) location is controlled by W7. When the jumper is **installed** at W7, the remote reset option is enabled. When the jumper is **removed**, the remote reset option is disabled. Figure 5 shows how to implement the remote reset option.

6.1 AM-190 Board and Jumper Definition Table

The AM-190 board is shown in Figure 4 with all of its jumpers set in their default positions. The illustration is followed by a jumper configuration table, which explains the function and default setting for each jumper on the board.

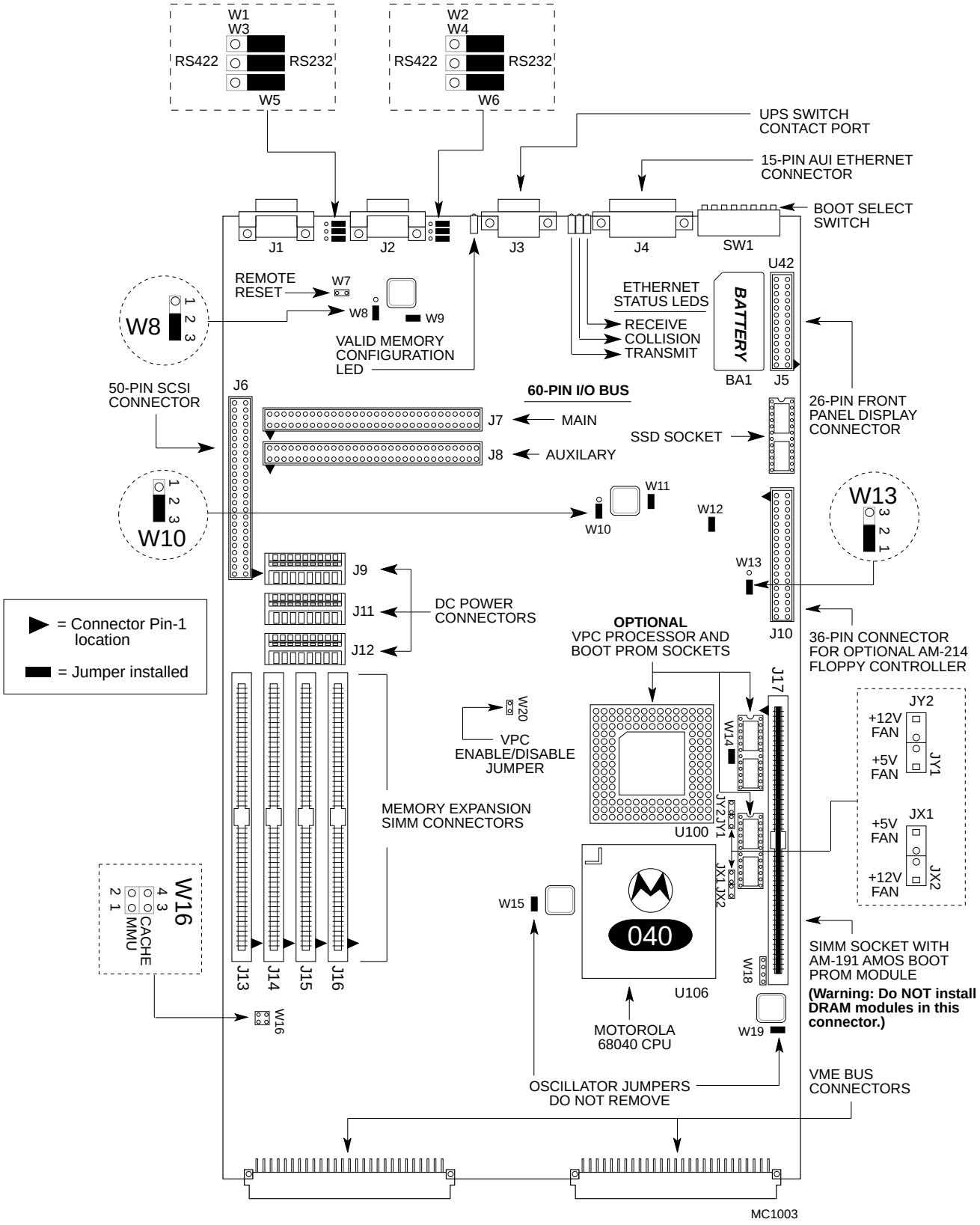

Figure 4. AM-190 CPU Board

JUMPER LOCATION	FUNCTION	DEFAULT
W1 / W3 / W5	RS422 and RS232 selection for port 0. (See Figure 1.)	Factory set to RS232
W2 / W4 / W6	RS422 and RS232 selection for port 1. (See Figure 1.)	Factory set to RS232
W7	Remote Reset option jumper, applicable to port 0 only. W7 installed = Remote Reset enabled. W7 removed = Remote Reset disabled.	Factory set to disable
W8	TIMEOUT clock source. W8 in the 1-2 position = 500Khz. W8 in the 2-3 position = 1Mhz.	Factory set to 1Mhz
W9	Oscillator jumper, do not remove.	Factory set to "IN"
W10	SCSI active termination enable/disable. W10 in the 1-2 position = SCSI termination disabled W10 in the 2-3 position = SCSI termination enabled	Factory set to enable
W11	Oscillator jumper, do not remove.	Factory set to "IN"
W12	40Mhz clock connect jumper for Ethernet Sonic chip.	Factory set to "IN"
W13	Ethernet Sonic chip clock control. W13 in the 1-2 position = 1/2 BCLK W13 in the 2-3 position = BCLK	Factory set to 1/2 BCLK
W14	40486 cache enable/disable. Supports optional VPC. W14 installed = disabled W14 removed = enabled	Factory set to disable
W15	Oscillator jumper, do not remove.	Factory set to "IN"
W16	W16 jumper installed in the 1-2 position = MMU disabled W16 jumper removed from the 1-2 position = MMU enabled W16 jumper installed in the 3-4 position = 68040 internal cache disabled W16 jumper removed from the 3-4 position = 68040 internal cache enabled	Factory set to enable Factory set to enable

Table 1. AM-190 Jumper Configuration Table

AM-190 Jumper Configuration Table (cont.)

JUMPER LOCATION	FUNCTION	DEFAULT
W18	Test points	Factory set to "OUT"
W19	Oscillator jumper, do not remove.	Factory set to "IN"
W20	80486 VPC enable/disable. Supports optional VPC. W20 installed = enabled. W20 removed = disabled.	Factory set to disable

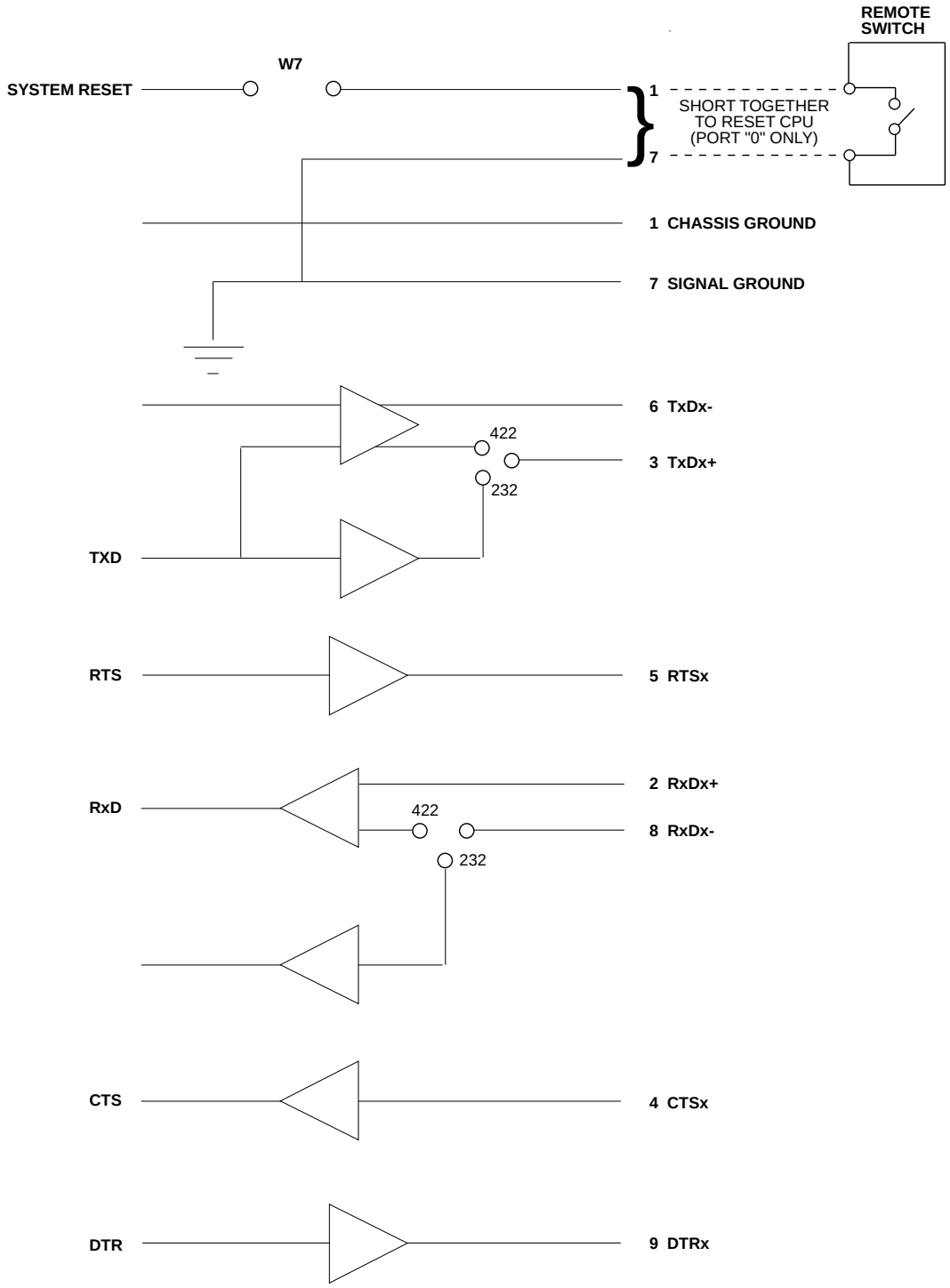

Figure 5 — RS-232/422 I/0 Port Configurations

6.2 Using the AM-190's Two On-Board Serial I/O Ports

The AM-190 has two on-board serial I/O ports. To use these ports, you must define the terminal characteristics to AMOS using a TRMDEF statement in the system initialization command file. Here is a sample TRMDEF statement:

```
TRMDEF TRM1,AM190=1:9600,AM62A,100,100,100
```

TRMDEF statements for the AM-190's two on-board serial ports must share the following characteristics:

1. The interface driver name must be AM190.

2. The baud rates for the two ports must be compatible. That is, they must come from the same table below:

Table #1	Table #2
50	75
110	110
134.5	134.5
200	150
300	300
600	600
1200	1200
1050	2000
2400	2400
4800	4800
7200	1800
9600	9600
38400	19200

The baud rate 56700 is exempt from the restrictions discussed in this section and may be used for any port regardless of what other baud rates are chosen.

The baud rate you choose for port 0 determines the table used for both ports on the AM-190. If the baud rate appears in both tables above — for example, if it's 9600 — you can take the baud rate for the second port from either table.

If, however, port 0's baud rate appears only in one table — such as 38400 — you must take the rate for port 1 from the same table.

If you assign a baud rate from the wrong table to port 1, the corresponding rate from the correct table is substituted and used instead of the rate you specified.

For example, you choose 19200 baud for port 0. This selects table #2 for ports 0 and 1. If you then specify a baud rate of 38400 for port 1, which is found only in table #1, the computer substitutes the corresponding rate from table #2, and uses 19200 for port 1.

The baud rates used for the AM-190's on-board serial ports are independent of the baud rates used for any additional ports you have attached to your computer.

For complete information on TRMDEF, see the system initialization command file documentation in the *System Operator's Guide*.

6.3 AM-190 Expansion I/O

There are two 60-pin connectors on the AM-190 CPU board. The first port (J7) supports 24 serial ports and one AM-324 parallel printer board. The J8 connector supports up to 32 serial ports.

Connector J7 supports the standard interface drivers for all Alpha Micro paddle card devices designed for the AM-355 I/O bus. AM-355 serial I/O boards attached to connector J7 use the same interface driver used by the AM-190's two on-board serial ports, **AM190.IDV**. AM-358 serial I/O boards and any other AM-355 I/O bus paddle cards attached to the J7 connector will use drivers designed for those specific devices.

The J8 connector only supports AM-355 and AM-358 I/O boards; AM-355 and AM-358 I/O boards attached to connector J8 use special interface drivers, **AM355B.IDV** and **AM358B.IDV**.

For information on jumper settings, port numbering, and I/O addresses, see the installation guide shipped with the AM-355 I/O bus device you are installing.

6.4 Boot Device Setup (Main and Alternate)

The illustration in Figure 6 shows the boot configuration switches located on the AM-190 board.

The boot configurations switches, which are accessed through a cutout in the AM-190's rear panel adapter, are divided into two groups—ALTERNATE and MAIN. The left four switches, numbers 1 through 4, select the ALTERNATE boot device. The right four switches, numbers 5 through 8, select the MAIN boot device.

Your computer boots from the selected alternate boot device if it is present and activated. To select the alternate device you want, set switches 1 through 4 as shown in Figure 6.

The factory setting is for no alternate device.

If the selected alternate device is not activated, or if there is no alternate device, your computer boots from the main device indicated by switches 5 through 8. To select your main boot device, set these switches as shown in Figure 6:

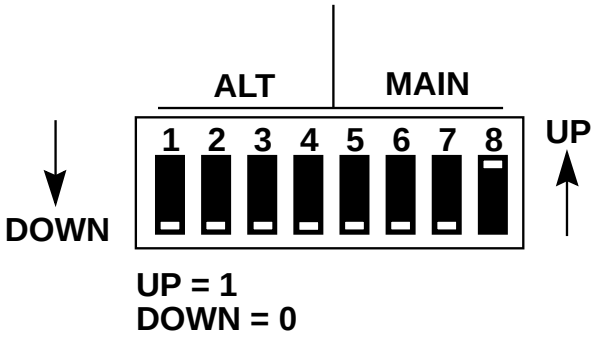

ALTERNATE

SWITCH NUMBER 1	2	3	4	BOOT DEVICE
0	0	0	0	No Alternate
0	0	0	1	Floppy
0	0	1	1	VCR
0	1	1	0	SCSI Streamer/DAT
0	1	0	0	AM-640 MagTape

MAIN

SWITCH NUMBER 5	6	7	8	BOOT DEVICE
0	0	0	0	Floppy
0	0	0	1	SCSI Disk Drive*
0	1	0	0	AM-520 Controller

* Applicable only to SCSI drives connected to the J6 connector on the AM-190 board.

MAC819

Figure 6 — Main and Alternate Boot Switch Settings

6.5 High Performance Ethernet Port

The AM-190 has an on-board 15-pin high performance Ethernet port. Unlike the AM-362 and AM-340 Ethernet controllers, the AM-190's Ethernet circuitry can communicate directly with system memory, which greatly increases its performance. The 15-pin connector is A.U.I. compatible and with the addition of a commercially available transceiver, the port can be converted to 10Base-T or thin Ethernet operation.

In order to use the Ethernet port, you'll need Alpha Micro's networking software, AlphaNET, which must be purchased separately. The *AlphaNET Installation Instructions*, DSO-00064-00, explain how to configure your networking software and hardware.

Within your network initialization file, you must enter a network driver name. The driver name for the AM-190's Ethernet port is **AM190.NDV**.

7.0 ON-BOARD UPS MONITORING PORT

Figure 4 shows the AM-190's J3 uninterruptible power source (UPS) switch contact port. In order to use the UPS switch contact port, your AMOS operating system must be no earlier than AMOS 1.4C or AMOS 2.2C and the version of UPSTAT.LIT must be 1.0(105) or later. By using the UPSTAT.LIT program (available on AMTEC+), UPS status messages and corresponding front panel display codes are relayed to the user. These messages and front panel display codes are shown in Table 2:

Front Panel Status	UPSTAT.LIT Messages
41	UPS is in by-pass; Please turn on the run switch.
40	UPS normal, inverter running.
42	UPS detected the AC utility failed.
44	UPS low battery detected. 2 min. of power remaining!
46	UPS inverter running, and low battery.
48	UPS has detected a fault!
4F	UPS status cable not installed.
0	This CPU does not have a UPS Status Port. If run on other than the AM190, AM185-50(VME), AM-140 (AM3000M)

Table 2. UPSTAT.LIT Messages and Front Panel Display Codes

There are two different types of cables used to connect the AM-190's UPS switch contact port to the UPS device—i.e., the type of cabled required depends on what model of UPS you are using.

Cable A

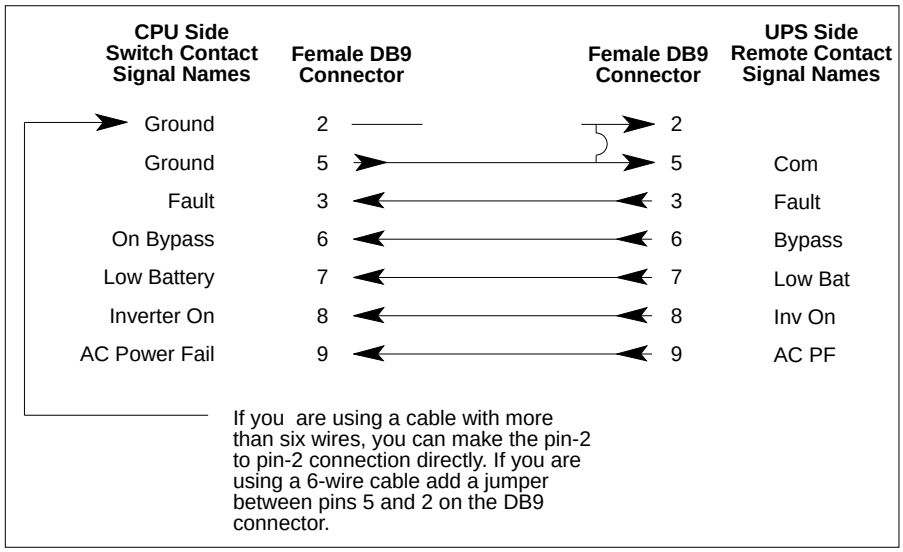

MAC823

Cable A is for the following UPS models.

UPS Model #	Capacity
VPA-22015-10	1.5 Kva - 1400 Series
VPA-22009-20	2 Kva - 1400 Series
VPA-22010-10	3 Kva 120V - 1200 Series
VPA-22010-11	3 Kva 208/240V - 1200 Series
VPA-22011-11	5 Kva 208/240V - 1200 Series
VPA-22010-21	3 Kva 208/240V - 1400 Series
VPA-22011-21	5 Kva 208/240V - 1400 Series

Cable B

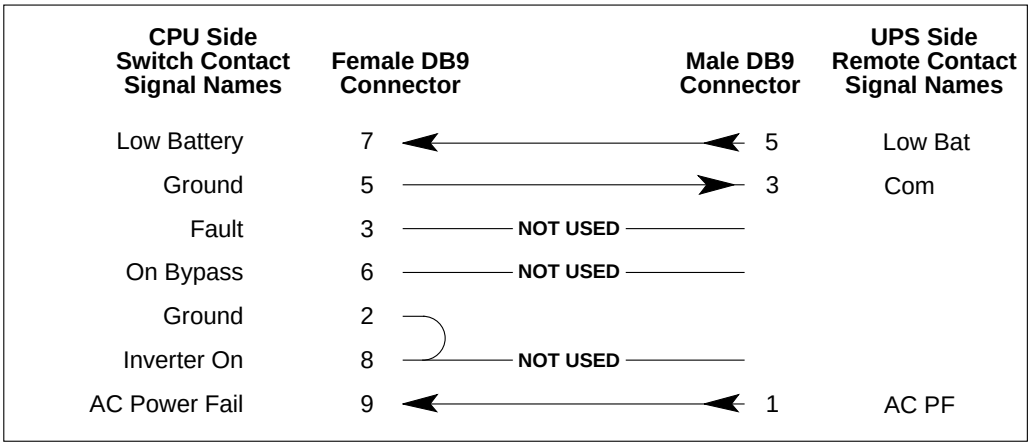

MACXXX

Cable B is for the following UPS models.

UPS Model #	Capacity
VPA-22012-10	500 Va - 1400 Series
VPA-22014-10	750 VA - 1400 Series
VPA-22008-10	1 Kva - 1400 Series
VPA-22009-10	2 Kva - 1200 Series

The monitor in AMOS 1.4C and 2.2C (and later) operating system releases has the ability to automatically generate the following UPS front panel display codes, providing the UPS switch contact port has been cabled to a UPS device:

Front Panel Status Codes	**Description**
°°°°°°°8	Internal power supply AC PF detected.
°°Flashing 8	Must reboot system. System used up all battery power.
°°°°°°40	UPS inverter on. Normal operation recovering from an AC-power failure.
°°°°°°41	UPS is in bypass, System running without UPS battery protection. Please turn on UPS run switch.
°°°°°°42	UPS inverter on & AC power failure detected.
°°°°°°43	Not valid, system dead.
°°°°°°44	UPS inverter on, & low battery. Batteries are recharging, please check.
°°°°°°45	UPS in bypass and low battery.
°°°°°°46	Inverter on & AC power failure & low battery. 2 minutes of power remaining!
°°°°°°47	Not valid, system dead.
°°°°°°48	UPS fault
°°°°°°49	UPS fault and UPS in bypass.
°°°4A - 4E	Not valid.
°°°°°°4F	UPS cable has been unplugged from UPS port.

If you are using the AM-190's write buffering feature described in Appendix°B, the system monitor in AMOS 2.2C and 1.4C has a feature you should be aware of. To help prevent possible data loss, the write buffer will be flushed and disabled if a low battery condition is detected by the system monitor via the AM-190's on-board UPS status port.

8.0 SERIAL UPS MONITORING

With an Alpha Micro UPS (Uninterruptible Power Source) and the related UPS Monitoring Software (Version 1.2(162) or later) installed, users will be able to monitor their Alpha Micro UPS device from any terminal on their computer.

The serial UPS software generates a number of status screens, like the example shown below:

```
UPS0:              Alpha Micro U.P.S. Status Monitor        Version 1.2(162)

The UPS selected is:   2Kva UPS 120V Input
Last Status Update :   Tuesday, March 30, 1993  10:01:07
Updates since boot :   337744
OPERATING PARAMETERS
 Input Voltage (rms)       : 116.4 Vac
 Total battery remaining   : 101.7 %
 Battery voltage           :  97.6 Vdc
 Shutdown voltage          :  78.0 Vdc
 Output Loading (% of max) :  44.0 %
 Output Current            :   7.3 Amps
 Output Voltage (% rated)  : 100.0 %
 Output Voltage (rms)      : 120.1 Vac
 Output (VA) Power         : 891.4 Watts
 Power Failures Counted    :    24

     RUN STATUS                                BATTERY STATUS
  A.C. input present                         battery charging
  no unit faults
  inverter  running        Previous Power Failure occurred: 03-26-93 14:14:38
  synchronous ac           Last Power Failure occurred:
Freq.(Hz) In=60.1  Out=60  Monday, March 29, 1993 14:23:54
```

Information on the configuration and use of the UPS monitoring software is included in the *UPS Monitor Software User's Guide*, DSS-10394-00.

9.0 PREPARING FOR AN AM-190 UPGRADE

As you might expect, there is more to installing an AM-190 board than just removing your old CPU board and installing the new board. In fact, if you were to simply remove your old CPU board and install an AM-190 board, without doing anything else, the computer would not boot. Before you can install an AM-190 board, you must consider these questions:

- Do I have the correct operating system?
- Are all the boards in my computer compatible with the AM-190 board?
- Do any of my peripheral devices need to be upgraded for AM-190 compatibility?

- Do I have a current and complete system backup?
- Do I have a tape available to warm boot the computer?

The first three questions are covered earlier in this document in the section dealing with compatibility. Make sure you read the compatibility section very carefully before attempting the installation. The second two questions, discussed in the next few sections, might be the most important if you encounter a problem during the installation.

9.1 Protecting Your Data

When doing a major upgrade to your computer, you want to be absolutely sure you have a recent and complete system backup. While it is very unlikely data stored on your hard disk drive would be corrupted when upgrading your computer—you should be prepared for anything. **Before you loosen the first screw or download any new software, make sure all your data is copied onto some form of backup media.** Make sure you are able to read the data on your backup media; you want to be absolutely sure the data on your backup media is both readable and restorable.

9.2 Warm Boot Ability

A warm boot tape allows you to access the computer in situations where you are not able to boot from the hard disk drive. When doing an AM-190 upgrade, you'll be modifying the system initialization command file and using the MONGEN program to embed a new driver in your AMOS monitor. Either of these two operations, if done incorrectly, could result in a computer that won't boot. If you have a warm boot tape, you will be able to access your hard disk drive and correct the situation which prevented you from booting. Without a warm boot tape, it will be much more difficult to access the computer and correct the problem on the hard disk drive. See the *Systems Commands Reference Manual* for information on how to create a warm boot monitor and a bootable tape.

9.3 Booting from a Floppy Drive

If your computer includes a floppy drive, it can be configured as a boot device. A floppy drive makes an excellent alternate boot device and may prove invaluable should your hard disk drive fail to boot.

To boot from a diskette, you must reconfigure the AM-190's boot switch, selecting your floppy drive as the boot device. The floppy drive can be configured as either the main or alternate boot device. Information on how to configure the AM-190's boot switch is described in Section 6.4. Even though the entire AMOS release will not fit on a single diskette, you can create a bootable diskette by copying only files essential for booting and minimal operation onto the diskette. Once you copy the necessary files onto the diskette, you must use the MONGEN program to create a bootable monitor. AMOS contains two special drivers designed for making bootable diskettes using the MONGEN program:

- BMIN.DVR is used for creating a bootable diskette for computers using 5-1/4" half-height floppy drives.

- BFLP.DVR is used for creating a bootable diskette for computers using 3-1/2" floppy drives.

Don't forget that the system initialization command file on the diskette must be updated to designate the floppy drive as the boot device.

9.4 Upgrading Your AMOS Operating Software

Unless you are already running an AMOS 1.4C or 2.2C (or later) software release, you will need to update your operating system. It is highly recommended that you update your operating system **before you install the AM-190 board**. Load the AM-190 compatible operating system and corresponding hardware support tape onto your computer's hard disk drive, following the instructions in the AMOS release notes supplied with the software. Once the software is loaded, you'll need to:

- Use the MONGEN program to load your generic boot device driver into the new monitor—e.g., use SCZDVR.DVR if you are booting from a SCSI drive; use 520DVR.DVR if you are booting from an ESDI drive.

- If you are using a DAT drive, you must log into the DVR: account and type:

  `COPY DAT.DVR=647DVR.DVR` RETURN

- If you are using an AM-626 or AM-627 Tandberg tape drive, you must log into the DVR: account and type:

  `COPY STR.DVR=625DVR.DVR` RETURN

- If you are using an AM-645 Exabyte tape drive, you must log into the DVR: account and type:

  `COPY MTX.DVR=645DVR.DVR` RETURN

Once you execute the above copy command, the AM-645 tape drive will not be operational until you install the AM-190 board. Also, unlike the previous AM-645 driver, 645DVR.DVR is not SSD protected.

After the software has been configured, make sure your computer is fully functional. Reboot the computer and do a complete check of all the hardware on your computer—e.g., printers, magnetic tape drives, network hardware (if applicable), etc. After you are satisfied all the hardware is working properly with the new operating system, you must configure the AMOS monitor to be compatible with the AM-190 board as described in the next section.

Using SCZDVR.DVR as described above will allow your computer to boot using your current CPU board. However, before you install the AM-190 board, you will be instructed to once again use the MONGEN program to embed an AM-190 compatible driver (SCZ190.DVR) into your AMOS monitor.

9.5 Preparing to Boot the AM-190 Board

Before you turn off the power to your computer and install the AM-190 board, you need to make a couple of adjustments for AM-190 compatibility:

Instructions outlined in this section require that you directly modify your AMOS32 monitor, as well as your AMOS32 system initialization command file. These files are being modified directly to allow the computer to boot from the new AM-190 board once it is installed. This is why it is so important to have a bootable tape or some other means of accessing your hard disk drive should a problem arise.

1. The TRMDEF statements for the AM-190's two on-board serial ports and for all AM-355 ports connected to the AM-190's J7 60-pin connector must be updated in your AMOS32.INI. The driver name must be changed from the one used by your previous CPU board to the driver name designed for the AM-190, AM190.IDV. For example:

```
TRMDEF TRM1,AM190=1:9600,AM62A,100,100,100
```

2. Also, the high performance features incorporated into the AM-190 board require more queue blocks. You need to increase the queue block parameter in the system initialization command file in order to support the AM-190 board.

   Use this formula to determine your new queue block requirement:

```
NEW QUEUE BLOCK REQUIREMENT = OLD QUEUE BLOCKS + (13 x THE NUMBER
OF JOBS)
```

   For example, if the QUEUE statement in your system initialization command file is currently set to 200 and the JOBS statement is set to 50, the resulting formula would look like this:

```
NEW QUEUE BLOCK REQUIREMENT = 200 + (13 x 50)
```

   For the example, the QUEUE statement would now be set to 850 to accommodate the AM-190 board.

3. If you are booting from a SCSI disk drive or have any SCSI peripheral connected to the AM-190 board, you need to define the SCSI dispatcher (described in Section 4.5) in your system initialization command file.

In order to install the dispatcher, the command:

```
SCZDSP SCZ190
```

must be entered in the system initialization command file **after** the JOBALC statements, but **before** the first DEVTBL command.

For example:

```
:T
JOBS 1
JOBALC JOB1
;
TRMDEF TERM1,AM190=0:19200,AM62A,100,100,100,EDITOR=15
VER
SCZDSP SCZ190.SYS
;
DEVTBL DSK1,DSK2
```

Once the dispatcher has been defined in your AMOS32.INI file, you must code the SCSI dispatcher to allow it to run on your specific system.

Once you enter the product installation code (PIC), the product overlay file is forever modified and will not accept a new PIC. This can be a problem if you happen to enter an incorrect PIC. As a safeguard, make a copy of the dispatcher overlay file before you do the SSD encodement. Type:

COPY SCZDSP.SAV=SCZDSP.OVR RETURN

By saving an unmodified version of the overlay file, you will be able re-enter the PIC if necessary.

To perform the SSD encodement, enter the following commands:

LOG SYS: RETURN
SCZPIC RETURN

You will be prompted for a Product Installation Code (PIC).

This PIC is a unique identifier for your system that must be obtained from Alpha Micro. Enter the PIC, carefully verifying you have entered it correctly and press RETURN.

After a brief pause, you will be returned to AMOS command level and you can proceed with the remainder of the installation. If you see the error message `?Improper SSD` after you have rebooted the computer, it probably means you have entered the PIC incorrectly. As mentioned above, you cannot SSD encode the same overlay twice; to re-encode the dispatcher software, do this command first:

```
COPY SCZDSP.OVR=SCZDSP.SAV RETURN
```

You will now be able to re-encode the dispatcher. If after once again rebooting the computer you still receive the same error, check with your dealer to make sure the correct PIC was supplied for your computer.

4. If your computer boots from an ESDI drive, skip forward to the section which describes the AM-190 board installation process. If you are booting from a SCSI drive, you need to embed a new driver into the monitor, **before turning off the computer and installing the AM-190 board.**

The AM-190's high performance SCSI port supports write buffering for SCSI hard disk drives. If you are going to use this feature, please read the information in Appendix B before continuing with this procedure.

Use the MONGEN program to embed the AM-190 SCSI compatible hard disk driver into the AMOS monitor located in account [1,4].

For Example:

```
LOG SYS: RETURN

MONGEN RETURN

Input monitor name:  AMOS.MON RETURN
New disk driver: SCZ190.DVR RETURN
New language definition table name: ENGLSH RETURN
New monitor name: AMOS32.MON RETURN

SAVE AMOS32.MON RETURN
```

Once you have embedded the AM-190 SCSI driver into the monitor, the computer is ready for the AM-190 board. Because the monitor is now compatible with the AM-190 board, the computer will not boot if you press the reset button while your old CPU board is still installed.

9.6 Network Initialization File

If you are an AlphaNET (via Ethernet) user, don't forget to change the name of the Ethernet driver in your network initialization file. The correct Ethernet driver name for the AM-190 board is AM190.NDV. If you have a network initialization file that looks something like this:

```
DRIVER=AM362
NETWORK=101
GROUP=2
NODE=7
NODECHECK=OFF
NAME=Ethernet Backbone
NODECOUNT=50
GROUPCOUNT=3
DEVICEADDRESS=3
```

it needs to be changed to look like this:

```
DRIVER=AM190
NETWORK=101
GROUP=2
NODE=7
NODECHECK=OFF
NAME=Ethernet Backbone
NODECOUNT=50
GROUPCOUNT=3
```

9.7 AM-190 Installation Checklist

At this point in the installation, all of the following preliminary steps required to support the AM-190 board should be complete:

1. All circuit boards should be updated (if necessary) to meet the minimum revision requirements, listed earlier in this document.

2. If you are using an AM-645 Exabyte tape drive, it must be updated with new firmware (part number PDB-00645-90) in order for it to be functional with the AM-190 board.

3. An AM-190 compatible operating system and corresponding hardware support tape should have been downloaded onto your computer's hard disk drive.

4. If you are booting from a SCSI drive, your AMOS monitor should be configured with the SCZ190.DVR file, using the MONGEN program, prior to shutting down your computer and installing the AM-190 board.

9.8 Removing the Old CPU Board

If you are adding an AM-190 board to a pedestal type single board computer (AM-2000M or AM-3000M), the upgrade instructions are located in this document in Appendix C. If are adding an AM-190 board to a single board AM-990 chassis, the upgrade instructions are located in Appendix D.

The procedure for removing your old CPU board is the same for all VME systems:

1. First, remove all terminal and other I/O cables connected to the computer's rear panel. Do not unplug the AC power cord, but make sure the computer's power switch is in the OFF position. (See the board handling caution paragraph at the beginning of the next section.)

2. In order to remove the CPU board, you must first remove the metal panel your I/O paddle cards are connected to. This panel is held in place with four screws; the older pedestal computers use four thumb-fastener screws; all other VME computers use four 6-32 phillips-head screws.

3. Once the screws are removed, you can tilt the panel away from the computer, allowing you to disconnect the cables connected between the I/O cards and circuit boards in your computer. After all the cables have been disconnected, set the I/O panel assembly aside.

4. To remove the old CPU board, you need to remove the two 6-32 phillips-head screws holding the rear panel adapter to the computer's rear panel. After the screws have been removed, you'll need to disconnect any cables connected between other devices in the computer and the CPU board—i.e., front panel display cable and 50-pin SCSI interface cable if applicable.

5. After the cables have been removed, you will be able to gently pull out on the rear panel adapter, which will dislodge the CPU board from the VME connectors on the motherboard. Once the board is free from the connectors, it can be removed from the chassis.

6. Don't forget to remove the SSD chip from your old CPU board. Reinstall the SSD chip on the new AM-190 board at location U42.

9.9 Installing the Auxiliary Cooling Fan (Pedestal Chassis Only)

In order to keep the AM-190 board's 68040 processor running cool, the product kit includes an auxiliary fan and mounting bracket. The fan and mounting bracket assembly attach to one of the two card cage brackets inside the pedestal chassis. The left hand card cage bracket (DWF-20221-00) is where the fan must be installed. The card cage bracket with the fan assembly installed is shown in Figure 7:

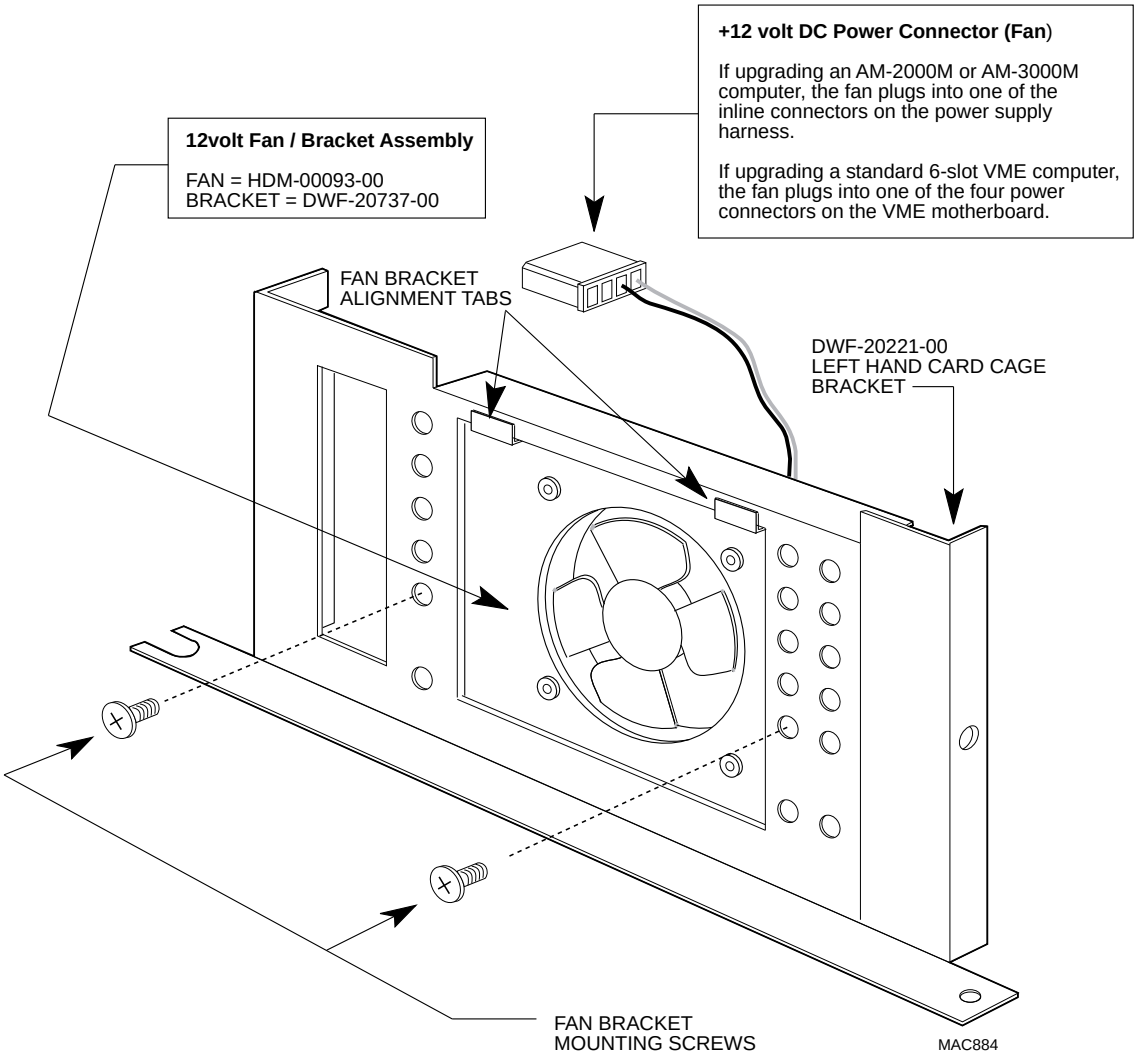

Figure 7. Auxiliary Fan Assembly

To install the bracket, place the fan assembly with its two alignment tabs positioned as shown in Figure 7. Once the assembly is in position, install the two (6-32) screws that fasten the assembly to the card cage.

Follow the instructions in the illustration describing where to plug in the fan's +12 volt DC power connector.

10.0 INSTALLING THE AM-190 BOARD (VME ONLY)

If you are adding an AM-190 board to a pedestal type single board computer (AM-2000M or AM-3000M), the upgrade instructions are located in this document in Appendix C. If are adding an AM-190 board to a single board AM-990 chassis, the upgrade instructions are located in Appendix D.

Prior to handling the AM-190 CPU Board, or any of the VMEbus based computer system boards, GROUND YOURSELF. The best ground is the chassis cabinet that houses the boards. Touch the cabinet prior to picking up, installing, or removing any board. Do not unplug the AC power cord from the cabinet, but make sure the power switch is turned OFF. Unplugging the computer cabinet isolates it from the common earth ground, leaving it vulnerable to static discharge.

The AM-190 assembly designed for use in all Alpha Micro VME computers is shown in Figure 8:

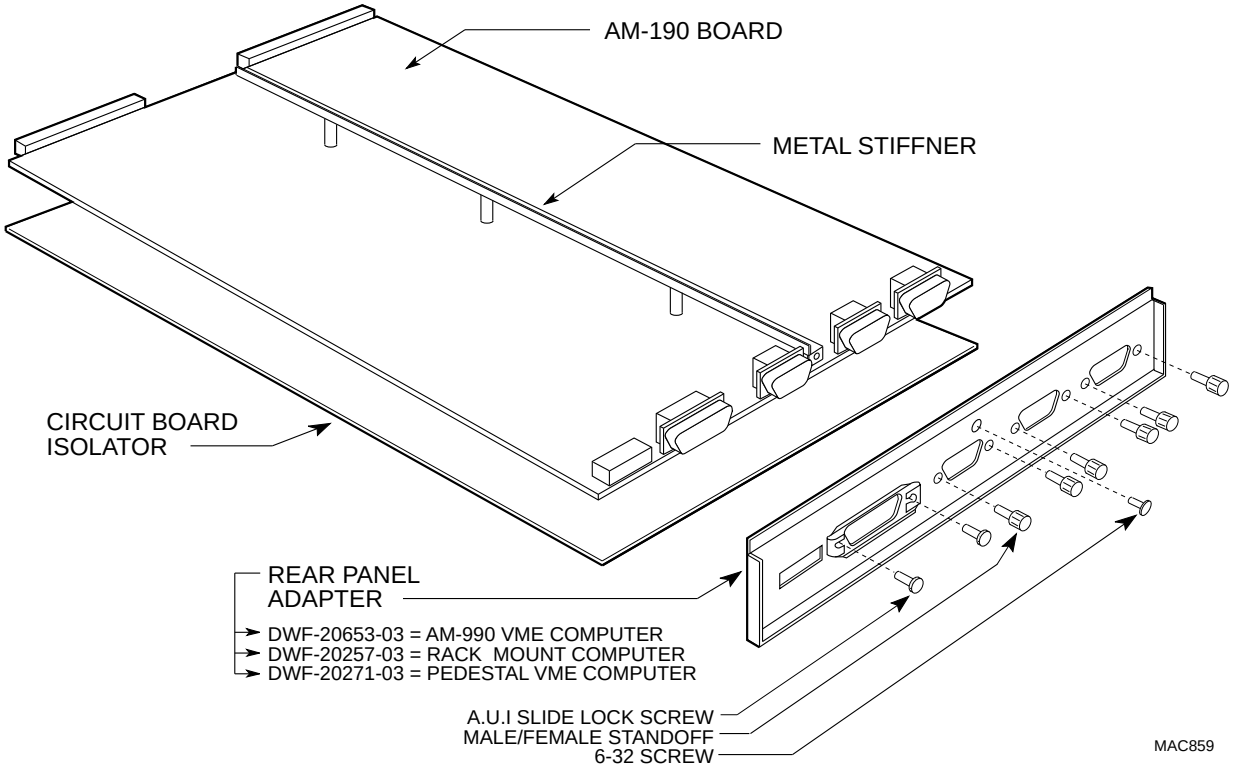

Figure 8. AM-190 Board VME Assembly

The AM-190 board is shipped fully assembled with a rear panel adapter designed for an AM-990 chassis. Rear panel adapters for old style rack mount and pedestal VME computers are included in the product installation kit (PDB-04000-50). To install a new rear panel adapter, you must remove the six male/female standoffs, the two screws holding the A.U.I connector latch, and the 6-32 screw connecting the rear panel adapter to the AM-190 board. This procedure should only be performed on a flat padded anti-static work surface. The board should not be lifted from the work surface until a new

rear panel adapter has been installed. **With the rear panel adapter removed, the AM-190 board is more susceptible to damage caused by board flex.** To install a new rear panel adapter, place the appropriate rear panel adapter into position and reinstall the screws. After the correct rear panel adapter has been attached to the AM-190, the assembly is ready to install.

If your AM-190 based AM-4000 computer includes a floppy drive or will incorporate the VPC option, these options must be installed on the AM-190 board before it is inserted into the chassis. See the *AM-214 Diskette Drive Installation Instructions* (revision A06 or later) or the°*Virtual Personal Computer Installation Instructions* (revision A04 or later) for information on how to install these options on the AM-190 board.

The memory modules on the AM-190 board are high enough as to prevent the use of the VME slot just above the CPU board. If your computer has a board installed in the slot directly above the CPU board location, **it must be relocated to another slot**. Since the AM-190 board has all of its memory located on-board, you will not need your old AM-730 or AM-740 memory board (or boards if you have more than one). Even though you are giving up one VME slot to allow for the installation of the AM-190 board, it should not create a problem based on the one or more slots gained by the removal of your old memory board or boards.

To install the AM-190 board:

1. Slide the AM-190 board into position inside the chassis. Gently press on the rear panel adapter until you feel the board settle into the VME connectors on the motherboard.

2. Insert the two 6-32 screws that hold the rear panel adapter to the rear panel.

3. Plug the front panel display cable and the SCSI 50-pin interface cable into the appropriate connectors on the AM-190 board. These connectors are in the same relative location on the AM-190 board as they were on your old CPU board; the connectors also appear in the AM-190 board illustration shown in Figure 4. All cable connections must be made pin-1 to pin-1. The red stripe indicates pin-1 on the cable and the illustration in Figure 4 shows the pin-1 location for all connectors on the AM-190 board.

4. Reinstall the I/O rear panel by first reconnecting the cables extending between the I/O paddle cards and the boards inside the computer. The cable connecting I/O paddle cards on the rear panel to the 60-pin connector on your old CPU board will plug into connector J7 on the AM-190 board. The J8 60-pin connector on the AM-190 board supports additional I/O not previously supported with other VME CPU boards. The use of the J8 connector is described earlier in this document in Section 6.3.

5. Reinstall the four screws that secure the I/O panel to the computer's rear panel.

6. Reconnect any I/O cables that were removed from the rear panel earlier in the installation process.

7. If your computer was using an AM-362 or AM-340 Ethernet controller, you will now be using the AM-190's on-board high performance Ethernet interface. If you are using standard Ethernet A.U.I. cabling, the cable can be plugged directly into the AM-190's 15-pin Ethernet connector. If you are using 10Base-T or thin Ethernet cabling, you will need to contact your Alpha Micro dealer and purchase an inexpensive M.A.U. (media adapter unit).

8. The hardware portion of the installation is now complete.

11.0 BOOTING THE NEW AM-190 BOARD

Turn the computer's power switch to the on position and your AM-190 board will start the boot process just as your old CPU board did. If the SCSI dispatcher was not defined in your system initialization command file prior to turning off the computer and removing your old CPU board, an error message similiar to this:

```
?The SCSI dispatcher must be defined in order to use this driver
```

will be displayed on your terminal. This error will be displayed each time a DEVTBL statement for a SCSI magnetic tape drive is encountered in your system initialization command file. While this error will not prevent the computer from booting, none of your magnetic tape devices will work until the dispatcher is defined.

12.0 INITIAL SYSTEM TESTING

After installation is complete, run the AM-190 Self Test program to make sure each subsystem is functional. The self test diagnostics are incorporated into the boot PROMs on the AM-190. Refer to the *Alpha Micro Self Test User's Guide* for instructions.

Once you have completed self test, press the reset button and wait for the computer to boot. At the AMOS prompt, type:

SYSTAT RETURN

Check the system status information displayed by the SYSTAT program and insure all jobs applicable to your computer are up and running—e.g., terminal, printer, task manager, etc.

13.0 ADDITIONAL DOCUMENTATION

For additional HARDWARE information, refer to the following:

1. *AM-4000 Series Owner's Manual*
2. *Alpha Micro Self Test User's Guide*
3. *Alpha Micro Installation and Planning Guide*

For additional SOFTWARE information, refer to the following:

1. *AMOS System Operator's Guide*
2. *AMOS System Commands Reference Manual*
3. The Release Notes for your version of AMOS and the corresponding hardware support release

APPENDIX A

SCSI TERMINATION

A.1 SCSI TERMINATION USING EXTERNAL TERMINATOR OPTION

The preferred method of terminating the SCSI bus in an AMOS based computer is the installation of an external terminator. In Early April of 1993, the external SCSI bus terminator became standard on all AMOS based computer configurations. Using an external terminator makes the task of installing an add-on subsystem (like a portable CD-ROM drive) easier, eliminating the necessity of removing terminators from a SCSI device located in the host computer.

The AM-190 board is sensitive in regards to SCSI bus termination. If you are using the external terminator and one of the SCSI devices inside your computer also has its terminators installed, you will experience problems.

The SCSI bus must be terminated at each end of the cable. The AM-190 terminates the SCSI bus at one end of the 50-pin interface cable. Termination at or close to the other end of the SCSI bus is required, either via an external terminatior or via a terminator installed on the SCSI peripheral near the end of the bus.

External terminators are available from Alpha Micro under part number PRA-00222-00.

To use the external terminator, you need to insure none of your SCSI peripherals inside the computer are terminated. You will also need to follow the guidelines in the section on providing termination power for the SCSI bus.

If you have a 10 or 21-slot rack mount VME computer and want to install an external terminator, you will need to order a special adapter cable, DWB-10200-01. The adapter cable is required because there is no external SCSI connector on these computers. The special cable has a connector that is compatible with the external terminator and would also allow easy access to your computer for a portable CD-ROM drive or other SCSI subsystem.

The external terminator is shown in Figure A-1:

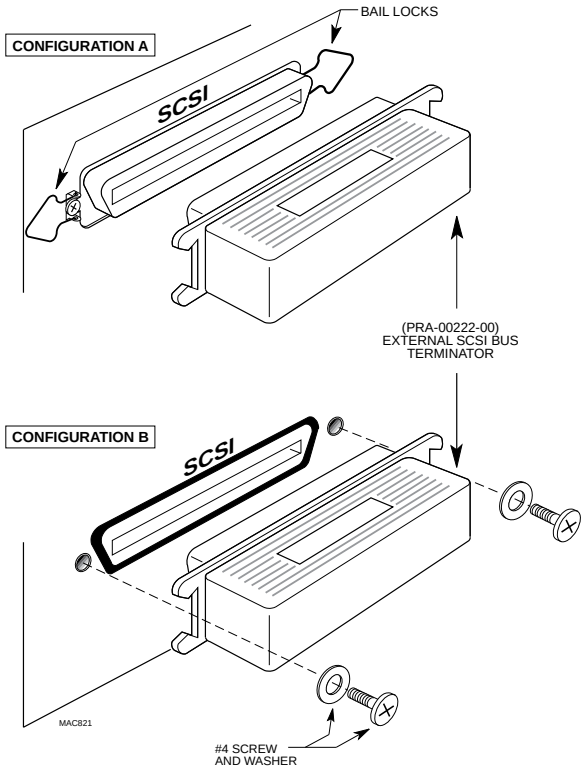

Figure A-1. External Terminator Installation

Figure A-1 shows two different types of external SCSI connectors.

1. Configuration "A" shows an extended external SCSI connector and bail locks for holding the terminator in place. This configuration is used on almost all of Alpha Micro's currently available product. The terminator is installed by sliding it over the connector and then latching the bail locks into the notches in the terminator.

2. Configuration "B" shows a flush mounted external SCSI connector. The only product Alpha Micro currently offers using a flush mounted external SCSI connector is the pedestal (also known as the "Classic") chassis. In this configuration, the terminator inserts into a cutout in the sheet metal and over the SCSI connector. The terminator is held in place with two #4 screws and washers.

A.1.1 Termination Procedure (Without External Terminator)

1. For all VME and single board AMOS based computers, the last SCSI device attached to the connector farthest down the cable away from the CPU board must have its terminators installed. If only one SCSI device is installed, that device must be terminated.

2. For subsystem installations, the last SCSI device attached to the connector farthest down the cable away from the host computer must have its terminators installed.

A.2 TERMINATOR POWER

In order to properly terminate the SCSI bus, one of the SCSI peripherals must be configured to supply termination power to the SCSI bus.

Use the following guidelines to determine which peripheral will be used to supply termination power for the SCSI bus:

1. Whenever possible, only one SCSI peripheral will be configured to supply termination power to the SCSI bus.

2. If a computer has more than one SCSI peripheral and at least one of those peripherals is a disk drive, one disk drive will be configured to supply termination power to the bus. The other disk or tape SCSI devices will be configured so they do not supply termination power.

3. If a computer does not have a SCSI disk drive, but does have one or more SCSI magnetic tape or CD-ROM drives, then one of these devices will be configured to supply termination power.

4. If a computer with one or more SCSI peripherals is cabled to a subsystem with additional SCSI devices, one SCSI device in the host computer would normally be configured to supply termination power for the bus.

   You should avoid having a SCSI device in both the host computer and the subsystem configured to supply termination power. Ideally, you want the source of the termination power for the bus to be supplied by **one power source**.

For information on how to configure terminator power, see the following documents:

- *SCSI Disk Drives Installation Instructions,* PDI-00436-20, revision A12 or later.

- ∞∞*AM-625/626/627 SCSI 1/4" Streaming Tape Drive Installation Instructions*, PDI-00625-00, revision A05 or later.

- ∞∞*AM-647 DAT Tape Drive Installation Instructions,* PDI-00647-00, revision A02 or later.

APPENDIX B

READ-AHEAD AND WRITE BUFFERING

B.1 INTRODUCTION

In the past, AMOS systems achieved high levels of performance by using a "Herbie" style disk controller (such as the AM-520) to offload a large portion of the overhead associated with disk access. One additional benefit of this offloading, is that extra cycles are available on the Herbie controller to perform functions such as read-ahead and write buffering. Both of these schemes are used by the current AM-520 firmware, but cannot be used on other non-intelligent interfaces such as the Alpha Micro SASI interface because the main processor running AMOS has to handle control of the SASI interface, stealing CPU cycles away from other resources, such as the terminal service system and user jobs.

In the case of the AM-190 board, a "hybrid" Herbie style controller has been implemented. A programmable RISC controller is used for SCSI bus communications and for data transfer to and from the AM-190's SCSI bus. The 68040 CPU is only involved with setup before and cleanup after a SCSI command is sent to a device—the rest of the command, including data transfer, is handled by the RISC processor.

Having the RISC processor take care of these details, allows us to implement both read-ahead and write buffering without the need for a separate Herbie controller. Also, higher levels of performance will be seen when using a fast SCSI-2 disk drive than with an AM-520 using ESDI drives for the following reasons:

- Physically, SCSI-2 drives are faster than most ESDI drives. They spin the platters twice as fast (reducing latency) and have significantly faster seek times.

- Data transfer rates are higher with fast SCSI-2 drives. ESDI drives have a maximum transfer rate of 18Mbits/s, whereas fast SCSI-2 drives transfer data at 10Mbytes/s (or around 4 times faster).

- The data transfer path is much faster with the RISC SCSI-2 controller. It is able to read from or write to system memory 32 bits at a time, taking 150ns per read or write. The AM-520 transfers data 16 bits at a time, taking 210ns per 16 bit transfer.

B.2 READ AHEAD

The AM-190's SCSI disk driver, SCZ190.DVR, is able to perform read-ahead directly into AMOS disk cache. When any program attempts to read a physical block from a disk, the SCZ190 driver will also read up to an additional seven sequential blocks from the disk drive and store these read-ahead blocks in the cache.

This read-ahead scheme works very well when jobs on the system are doing a large number of sequential reads. For example, data base searches and programs like REDALL execute much faster because the data they require is already in memory and only has to be transferred from the cache into the user partition.

Programs that do significant random disk access (such as RNDRED) tend to slow down with this read ahead scheme. Most of the slow down is caused by "thrashing" of the cache, where cache entries that will be used again are removed from the cache due to the allocation requirements of the read-ahead blocks (which typically are never used). The actual data transfer overhead is very little, as most SCSI disk drives (especially fast SCSI-2 drives) have a track cache built into the drive allowing both the target and read ahead blocks to be transferred over the SCSI cable without delay.

B.2.1 Controlling Read-Ahead

In order for read-ahead to occur on the AM-190, the AMOS disk cache, DCACHE.SYS, must be installed as normal and additionally, the full SCSI dispatcher (SCZ190.SYS) must also be installed. The number of read-ahead blocks to be transferred into cache on **every** physical disk access is controlled by the FIXLOG program.

When you use FIXLOG to create a driver for the AM-190 board, a new option will appear, which is the number of read-ahead blocks. For example, type:

```
FIXLOG RETURN

FIXLOG.LIT Version x.x(xxx)

1. Change the number of logicals
2. Create a sub-system driver

Enter choice: 2 RETURN

Enter name of generic driver to be used: SCZ190 RETURN
Enter number of logical units per physical unit: 10 RETURN
Enter SCSI id (0-6): 0 RETURN
Enter number of read-ahead blocks (0-7): 5 RETURN
Enter new driver name: MAX RETURN
New driver is now in memory.
```

To save the driver you have created, type:

```
SAVE MAX.DVR RETURN
```

If you wish to disable or change the number of read-ahead blocks, simply use the FIXLOG program to generate a new disk driver and if the disk driver is for the DSK: device, don't forget to use MONGEN and embed the new driver into the system monitor.

The generic driver AM-190 SCSI disk driver (SCZ190.DVR) is setup for seven read-ahead blocks.

B.3 WRITE BUFFERING

AMOS (and therefore every application written for AMOS) understands only 512 byte disk blocks. Therefore, when a disk write request is made by a program, a single block transfer is made to the disk drive. If the program then writes the next sequential block, the system must wait the latency time of the drive (i.e., the time it takes the drive to complete one revolution) before the next block can be written. Latency even on fast SCSI-2 drives is around 7ms.

In order to speed up the write process, when write buffering is enabled, all writes to the SCSI disk are first transferred into a buffer. If the write buffer becomes at least half full, or around three quarters of a second passes with no reads, or if a preset "guaranteed flush" timeout occurs, the SCZ190.DVR disk driver will begin scanning through the write buffer, finding blocks that need to be written out to the drive. The algorithm used to flush blocks out to the drive is able to find up to eight consecutive blocks and write them to the disk drive as a single write command, therefore dramatically improving system performance.

Another benefit of write buffering is it tends to eliminate duplicate disk writes, such as bitmap updates during operations such as copying files and tape restores and prevents head thrashing when reading through random access data files and writing a sequential file out to the disk (as most report generation programs do).

B.3.1 Potential Pitfalls

Obviously, there can be problems with write buffering, especially if either the system crashes or is powered off while writes are pending in the write buffer. If either of these two cases occur, all pending writes will be lost. Though this sounds like a major problem, it can also happen if write buffering is not enabled. However, write buffering increases the number of writes at risk.

To help reduce the possibility of data loss, certain safeguards have been put in place. Writes are not buffered indefinitely; they are performed whenever the device is not performing reads. Even if the drive is busy with read requests, the buffer is still periodically flushed, based on a user definable "absolute flush time." In addition, if you have a power failure and the UPS status port senses a low battery condition, the UPS interface allows AMOS to flush and disable the write buffer in preparation for a system shutdown. Also, the MONTST command automatically flushes the write buffer.

The primary write buffering risks are an errant software operation or a hardware failure that causes a system crash.

Therefore, you must weigh the potential for data loss (which is always there) versus the dramatic performance increase seen when using write buffering. If you are worried about the reliability of write buffering, it may be worth keeping in mind that the AM-520 disk controller has always used write buffering on a track-by-track basis (not quite as efficiently as the AM-190 write buffering scheme however). The SMARTDRV program that comes with MS-DOS 5.0 does write buffering (you may have noticed the "Waiting for system shutdown" message when re-booting a PC with CTRL-ALT-DELETE) and Unix based computers have always done it.

B.3.2 Setting Up Write Buffering

In order to enable write buffering, you must be using the full SCSI dispatcher (SCZ190.SYS). Write buffering is enabled by adding parameters to the SYSTEM statement used to load the driver. All hard disk subsystem drivers for the AM-190 SCSI interface must be loaded into system memory. Appending "/N" followed by the buffer-size and flush-period will enable write buffering for that device. For example:

```
SYSTEM DVR:devn/N buffer-size flush-period
```

where devn is the device you want to enable write buffering for (for example DSK and SUB).

One SYSTEM command is required for each different SCSI disk driver present in the system. For example, if you had two 1.2GB SCSI-2 drives named as DSK0-36 and DSK37-73 and one 540MB SCSI-2 drive named SUB0-17, you would need one additional SYSTEM command for the DSK device (although it's really two physical drives) and one additional SYSTEM command for the SUB device.

When specifying write buffering for a device, two files are loaded into system memory: .DVR and .WRC, which are the driver and cache buffer. This is true for all SCSI disk devices except the DSK device. For the DSK device, the file DSK.DVR does not need to be created because it is already loaded into the system monitor. Therefore, for the DSK device, only the file DSK.WRC will be loaded into system memory.

The buffer-size is the size of the write buffer (you specify the size in Kilobytes). Specifying a buffer size of over 100K is unlikely to improve performance.

The flush-period is the absolute maximum number of seconds data may be left in the write buffer without being written to the disk. For example, if you specified 30, you would know that after 30 seconds any pending writes would be written to the disk. This is true even if the disk is constantly busy servicing reads.

In the three drive example mentioned earlier, the added SYSTEM commands would look similiar to this:

```
SYSTEM DVR:DSK/N 100K 60  ;Driver in AMOS will create DSK.WRC
SYSTEM DVR:SUB/N 100K 60  ;Load SUB.DVR and create SUB.WRC
```

This would setup 100K of write buffering for the DSK devices and 100K of write buffering for the SUB device. All three drives would have their write buffers flushed every minute (or sooner if the drives are not busy with read requests).

B.4 FINAL NOTES

Both read-ahead and write buffering schemes used on the AM-190 board dramatically improve system performance in our lab tests. Both schemes are fine tuned for both the 68040 processor and RISC SCSI controller and do not take cycles away from AMOS like other commercially available disk optimization software.

Although our lab tests attempt to simulate the "real world" of user applications, they probably use the resources of the AM-190 CPU and SCSI sub-system completely differently than your application does, therefore we highly recommend you experiment with both cache and write buffer sizes, read-ahead blocks and flush periods on an installed system to find the best possible combination for that system.

APPENDIX C

PEDESTAL CHASSIS SINGLE BOARD AM-190 UPGRADE

C.1 INTRODUCTION

The following instructions explain the process of installing an AM-190 board into a pedestal style single board computer (AM-2000M or AM-3000M). The PDB-04000-51 upgrade kit includes all the necessary hardware for installing the AM-190 board. If your upgrade will include the use of an ESDI disk drive, you will need to order and install the PDB-04000-53 installation kit. The PDB-04000-53 installation kit includes a motherboard and an AM-520(-10) intelligent ESDI disk controller.

The power supply in the single board pedestal chassis has sufficient power to support one AM-190 board and one other additional card, based on the use of a 2-slot motherboard. However, because the power supply is unable to support a full 6-slot VME configuration, only the 2-slot motherboard can be used in this configuration.

C.2 REMOVING THE REAR PANEL

1. Power down your computer, but leave your AC power cord plugged in to maintain a good earth ground.

2. Remove the feet from the pedestal chassis. Once the feet have been removed place the chassis on a padded work surface. The chassis should be placed on its side with the rear panel oriented as shown in Figure C-1.

3. Use the instructions in your computer owner's manual for removing the sheet metal necessary to gain access to the CPU board (the AM-145 or AM-140).

4. After the cover has been removed, remove the screws from the rear panel as indicated by the arrows shown in Figure C-1, including the four metric screws. (Make sure you keep the four metric screws separate from the other rear panel screws.)

5. Once the screws have been removed, unplug the 60-pin I/O cable from the CPU board.

6. Remove the four hex standoffs that retain the CPU board's port 0 and port 1 connectors.

7. Remove the large hex nut that retains the Link connector (if applicable).

8. You should be able to separate the rear panel from the chassis by sliding it back and laying it down flat. Remove any I/O paddle boards and the external SCSI cable attached to the rear panel.

9. Disconnect the remaining cables connected to the CPU board.

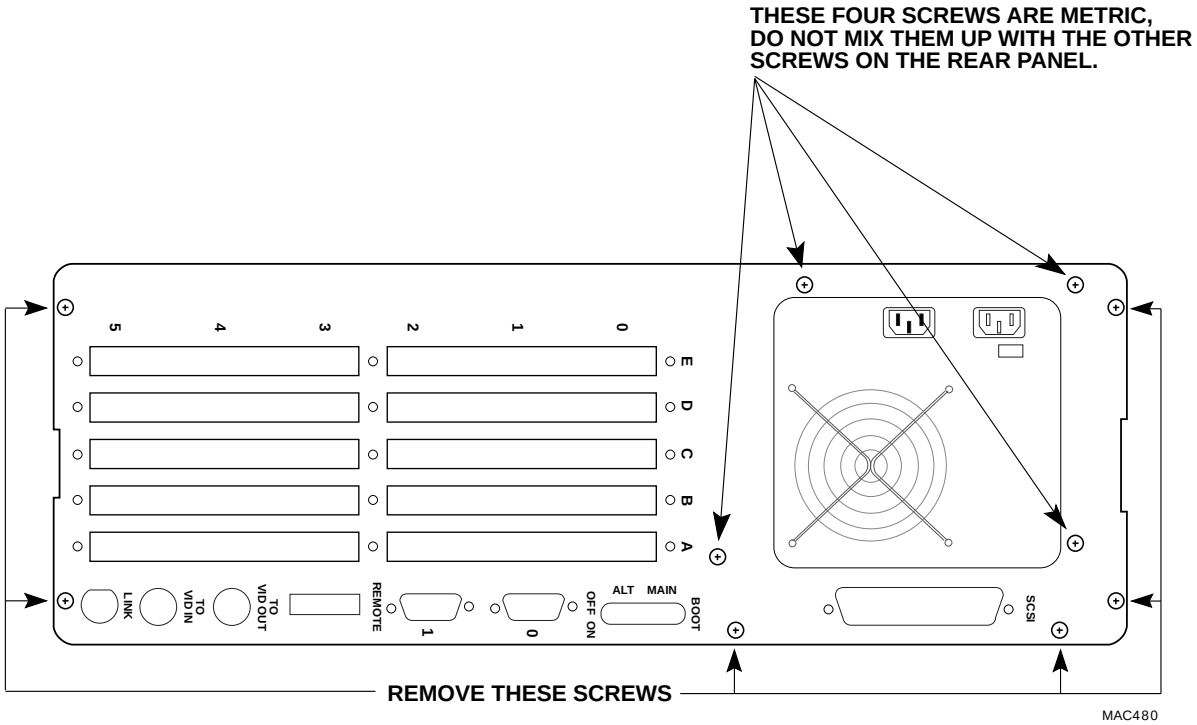

Figure C-1—Pedestal Rear Panel Removal

C.3 REMOVING THE CPU BOARD

1. Remove the screws holding the CPU board in place.

2. After all the screws have been removed, the board can be removed from the chassis.

3. The mounting base the CPU board attaches to must also be removed from the chassis. Remove the four nuts securing the CPU mounting base to the chassis. Remove the mounting base from the chassis.

Don't forget to remove the SSD chip from your old CPU board and install it in the AM-190 board. The SSD chip installs at location U42 on the AM-190 board.

C.3.1 Installing the New Front Panel Display Cable

The 26-pin cable that connected the computer's front panel display to the old CPU board is not long enough to reach the display panel connector on the AM-190 board. The installation kit includes a new front panel display cable (DWB-10132-00). To install this cable:

1. On the outside of the display panel is a small plastic plug that conceals a phillips-head screw. Remove the plastic plug and loosen the screw enough to allow you to slide out the display panel far enough to unplug the old display cable. Before the cable is unplugged from the display panel, take note of the red stripe on the cable; you want to make sure the new cable is plugged in exactly the same way.

2. Plug the new cable into the display panel; make sure you maintain the proper pin-1 to pin-1 connection. Tighten the phillips-head screw and return the display panel to its proper position. Reinstall the plastic plug that covers the phillips head screw.

3. In order for the cable to properly plug into the display panel connector on the AM-190 board, it must be routed as shown in Figure C-2. Note how the cable is folded and the position of the cable's red stripe. The cable must lie flat on the chassis bottom.

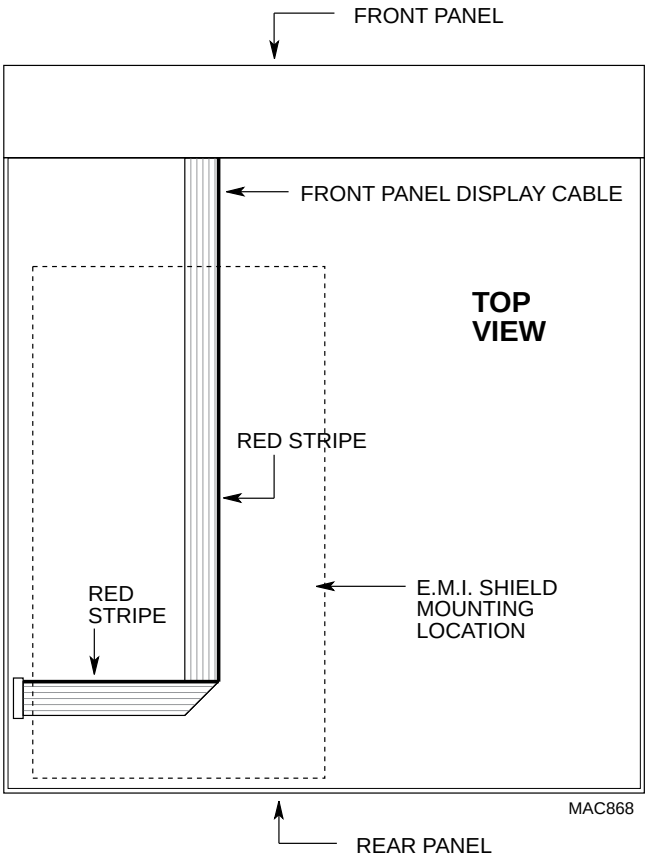

Figure C-2. Display Cable Routing

C.3.2 Installing the Auxiliary Cooling Fan

In order to keep the AM-4000's 68040 processor running cool, the product kit includes an auxiliary fan and mounting bracket. The fan and mounting bracket assembly attach to one of the two card cage brackets included in the installation kit. The left hand card cage bracket (DWF-20221-00) is where the fan must be installed. The card cage bracket with the fan assembly installed is shown in Figure C-3:

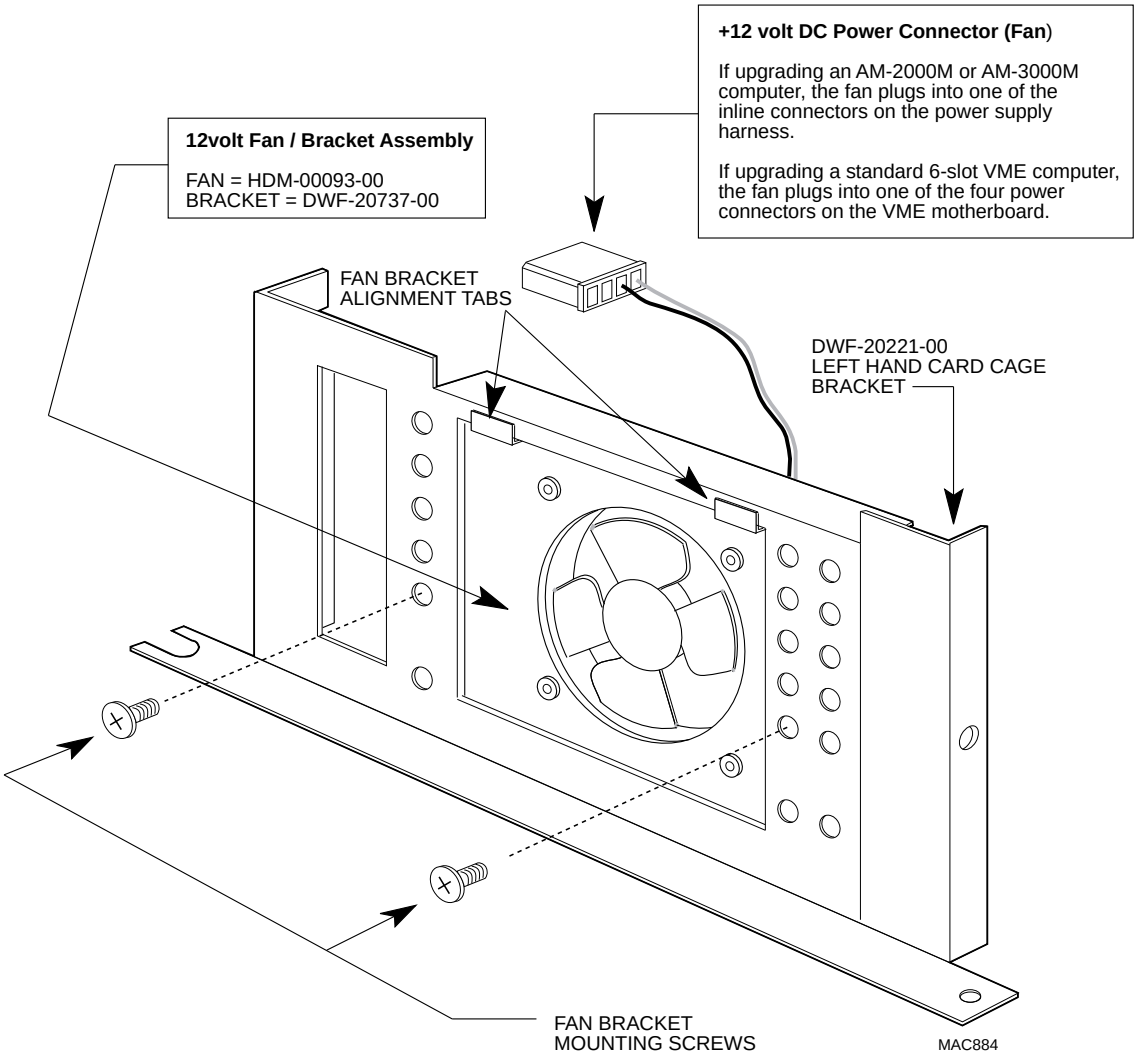

Figure C-3. Auxiliary Fan Assembly

To install the bracket, place the fan assembly with its two alignment tabs positioned as shown in Figure C-3. Once the assembly is in position, install the two (6-32) screws that fasten the assembly to the card cage.

Follow the instructions in the illustration describing where to plug in the fan's +12 volt DC power connector.

C.3.3 Installing the AM-190 Mounting Brackets

The procedure for installing the mounting brackets is as follows:

1. The two brackets designed for installing the AM-190 board are shown in Figure C-4. The same four studs that held the old CPU board mounting base in position are used to hold the AM-190 mounting brackets.

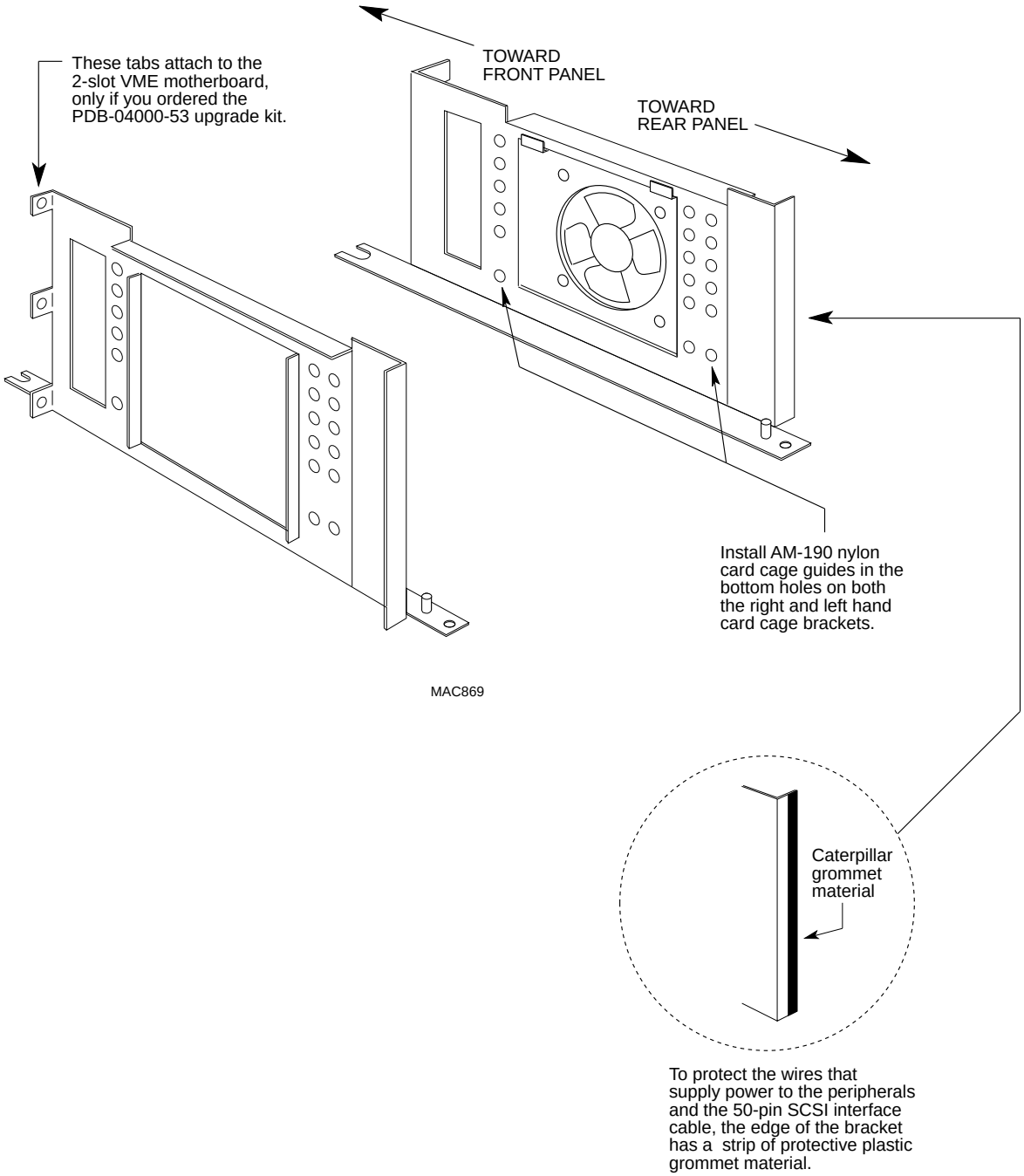

Figure C-4. AM-190 Mounting Bracket Assembly

2. Install the nylon card guides in the lower holes in both the left and right hand mounting brackets. The installation kit includes four nylon card guides; two are used for the AM-190; the other two are installed in the top mounting holes on each bracket, but only in installations that will include an AM-520 board.

3. There is a large rectangular E.M.I. shield (DWF-20418-00) that must be placed inside the chassis on top of the display cable. Note that the E.M.I. shield has turned up edges designed to protect the display cable. Make sure you set the shield in position with the curved edges facing up. The E.M.I should be positioned as shown in Figure C-2.

4. After the E.M.I. shield is in position, install the card cage brackets as shown in Figure C-4. Install the four nuts that hold the brackets in place.

C.3.4 Installing the New 50-Pin SCSI Cable

The 50-pin cable connecting the old CPU board to the SCSI peripherals in your pedestal (AM-2000M or AM-3000M) computer is not long enough to reach the AM-190's J6 SCSI port. The installation kit includes a longer 50-pin replacement cable (DWB-10193-07), which is pre-folded and ready to install.

Figure C-5 shows the new cable properly routed for an AM-190 based pedestal chassis. The cable extends from the AM-190's J6 connector to the SCSI peripherals and out to the rear panel. Figure C-5 does not show the pedestal chassis power supply. This was done to show how the cable is routed; it is not necessary to remove the power supply to install the cable.

As you install the cable, make sure the red stripe on the cable (indicating pin-1) is aligned as shown in Figure C-5. This will insure a proper pin-1 to pin-1 connection.

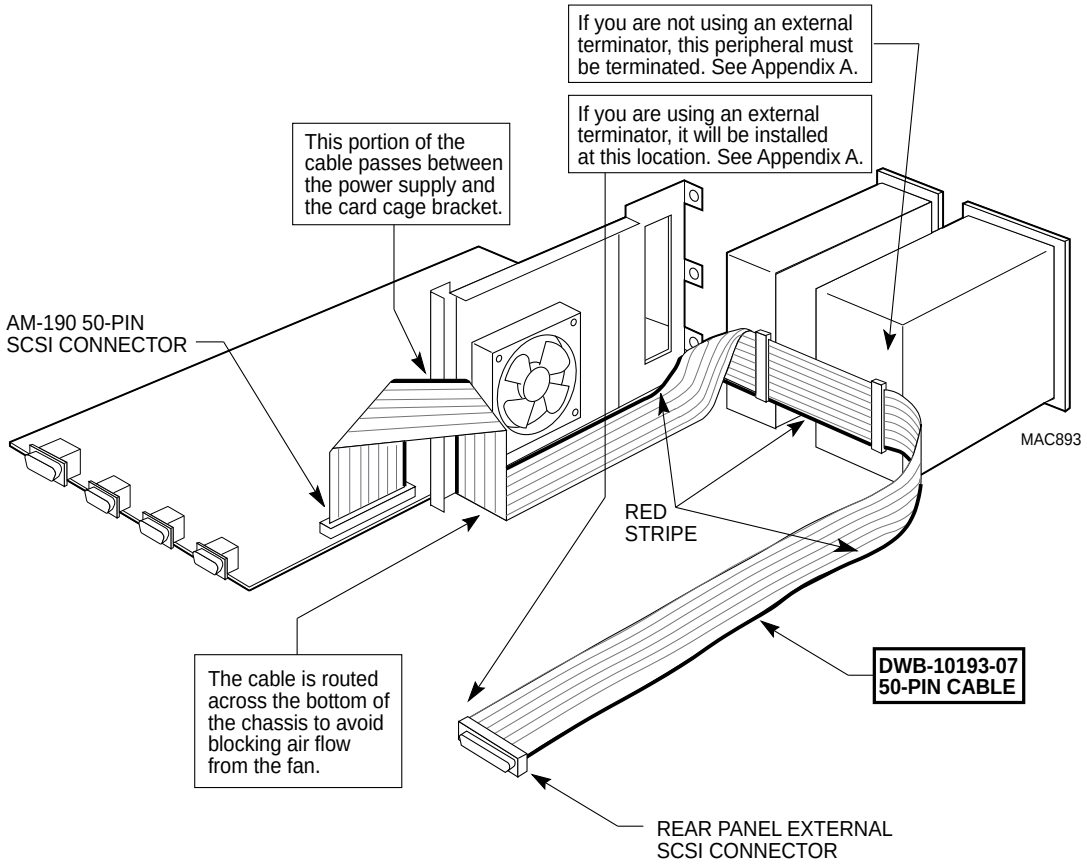

Figure C-5. SCSI Interface Cable Routing

C.4 INSTALLING THE OPTIONAL 2-SLOT MOTHERBOARD

This section is only applicable if you are installing the PDB-04000-53 product kit. If your installation does not include an AM-520 board, go to the next section describing the AM-190 board installation.

1. Before you can install the motherboard, you must first install the two metal stiffeners on the solder side of the motherboard. Each stiffener is held in place with three screws, which are inserted through the component side of the board, as shown in Figure C-6.

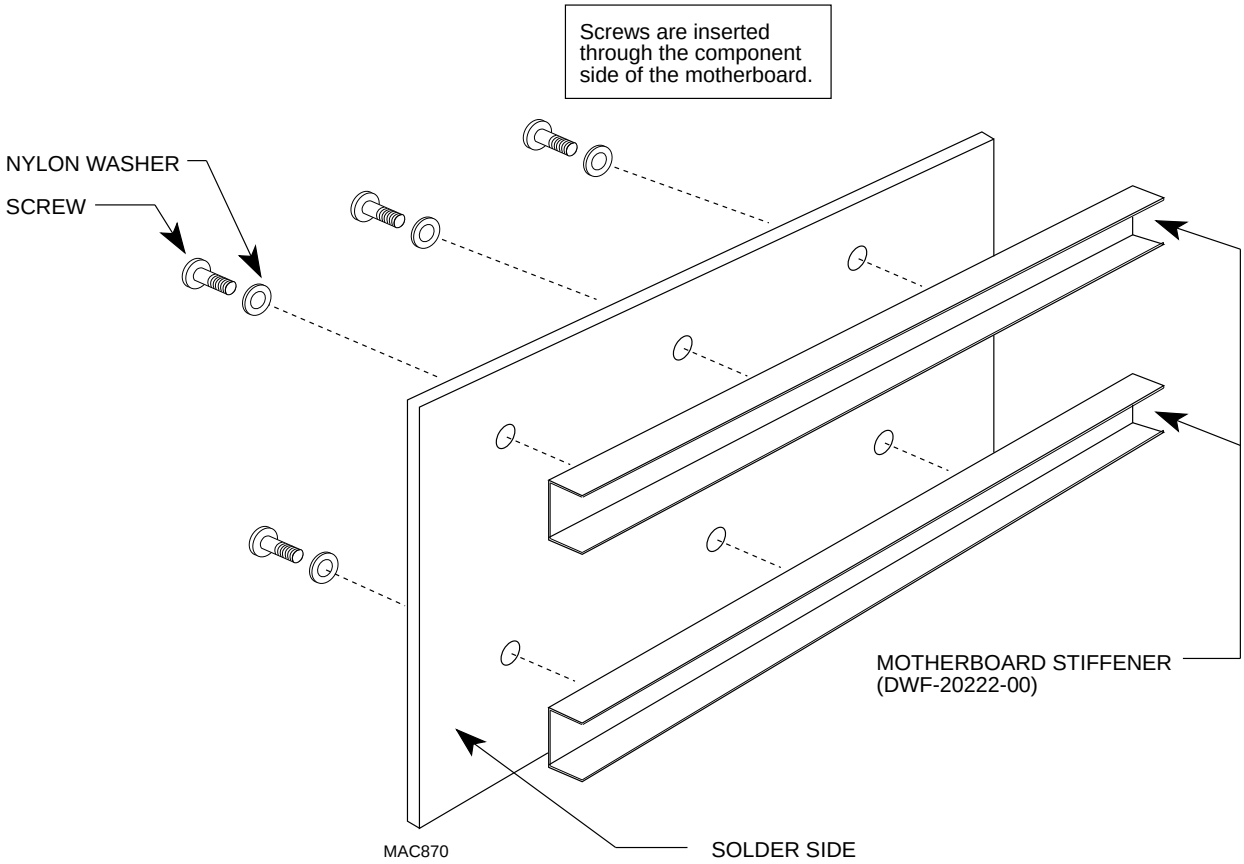

Figure C-6. Installing Motherboard Stiffeners

2. Don't forget to install the protective nylon washers, which keep the lock washers on the screws from digging into the finish on the motherboard.

3. Once the stiffeners are installed, the motherboard can be installed on the two mounting brackets in the chassis.

4. The two mounting brackets you installed inside your chassis each have three internally threaded standoffs designed to support the motherboard.

5. Position the motherboard in the chassis as shown in Figure C-7. Six screws hold the motherboard in place. Remember to use the nylon washers to protect the motherboard from being marred by the lock washers on the screws.

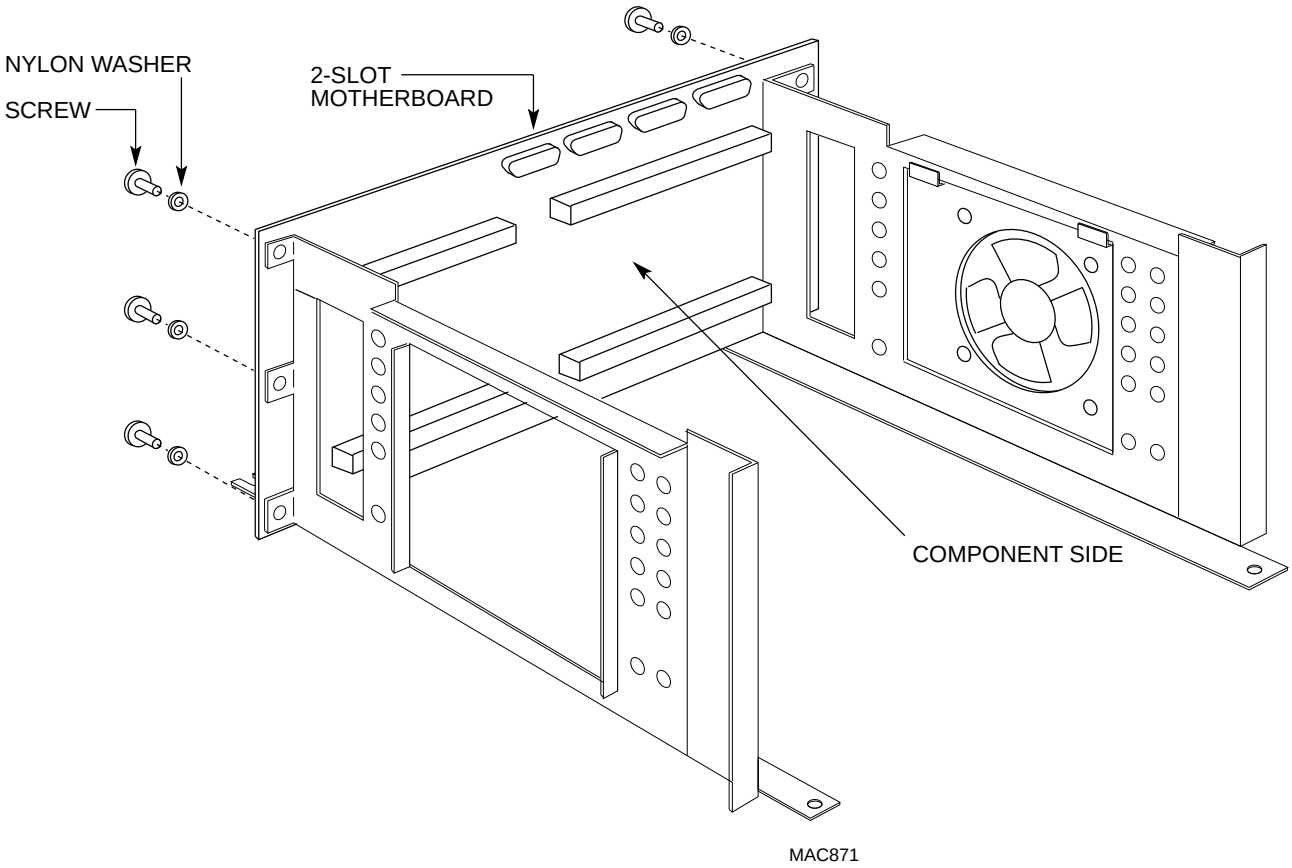

Figure C-7. Motherboard Installation

C.5 INSTALLING THE AM-190 BOARD

Before handling the AM-190 board, make sure you are properly grounded. This is essential as there are a number of static sensitive components on the AM-190 board. Also, when handling the board be extremely careful not to flex or twist the board. If you have installed the PDB-04000-53 motherboard kit, you need to use extra caution when inserting the AM-190 board into the VME connectors on the motherboard. When pressing the board into position, use only the amount of force necessary to seat the board into the connectors; avoid over stressing the board. Also, do not press against the I/O connectors on the AM-190 board; press the board into position using the corners of the board as shown in Figure C-8:

Before you slide the AM-190 board into position, make sure any user configurable jumpers are properly set for your configuration.

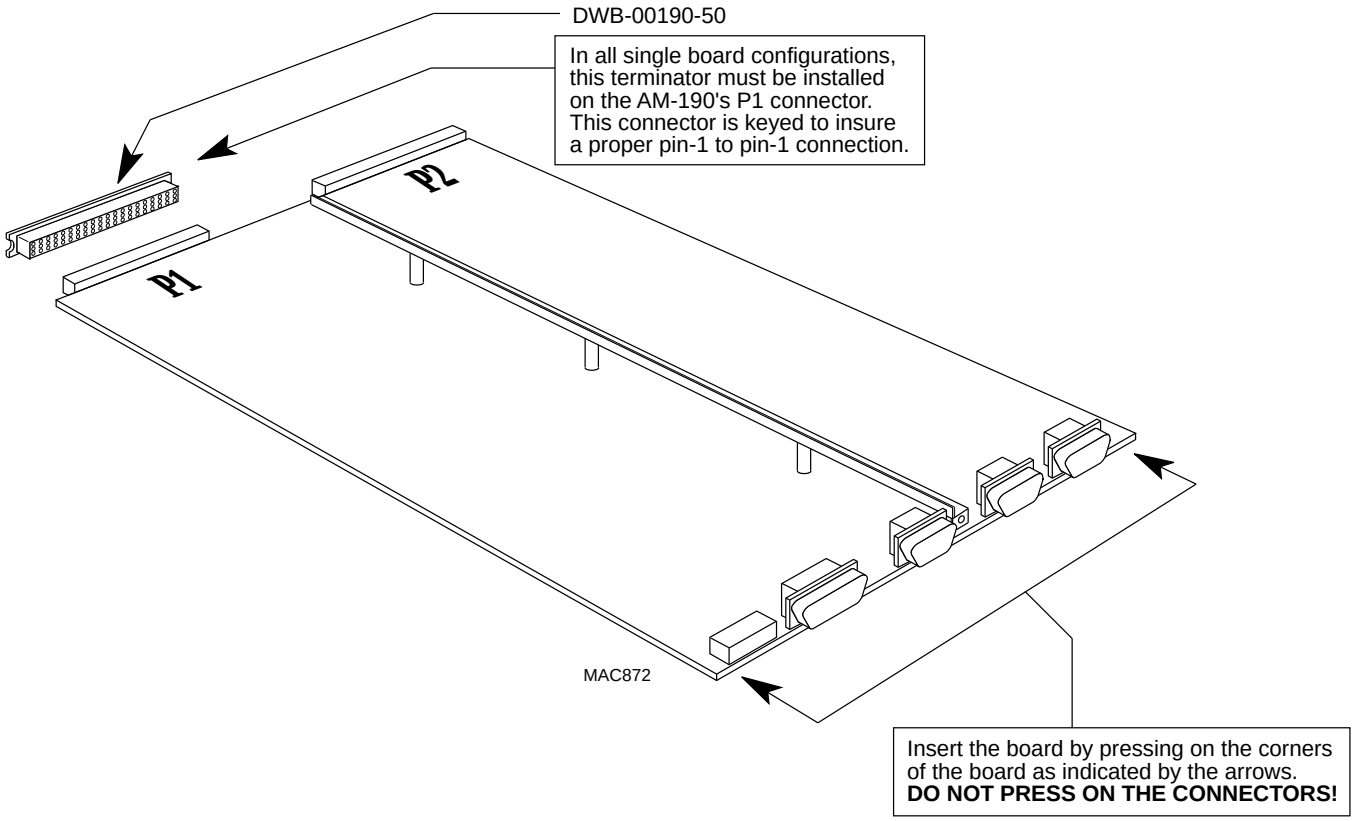

Figure C-8. AM-190 Board Insertion Method

1. If you are installing the AM-190 board in a single board configuration (no VME motherboard), you must install the terminator (DWB-00190-50) as shown in Figure C-8. This terminator (included in the installation kit) installs on the AM-190's P1 connector.

2. Align the AM-190 board with nylon card guides and slide the board into position. Make sure you observe all the cautions outlined at the beginning of this section.

3. Once the board is in its proper position, you will need to install the stiffener bar that ties the two mounting brackets together as shown in Figure C-9.

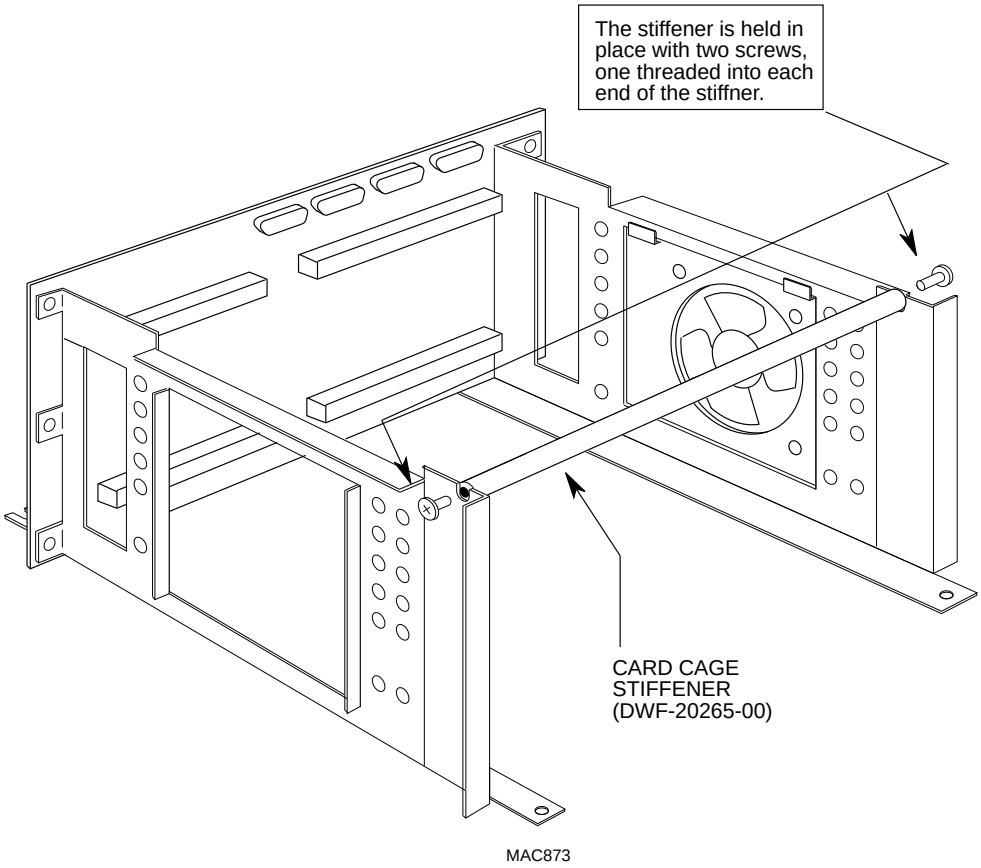

Figure C-9. Card Cage Stiffener Installation

C.6 INSTALLING AN AM-520 BOARD

This section is only applicable if you are installing the PDB-04000-53 installation kit.

1. After configuring your AM-520 board based on the information in the *AM-520 Intelligent Controller Installation Instructions*, align the board with the nylon card guides and slide it into position.

2. Make sure the AM-520 board is fully inserted into the connectors on the motherboard.

3. After the AM-520 board has been installed, you must remove the IACK jumper from the motherboard, as shown in Figure C-10.

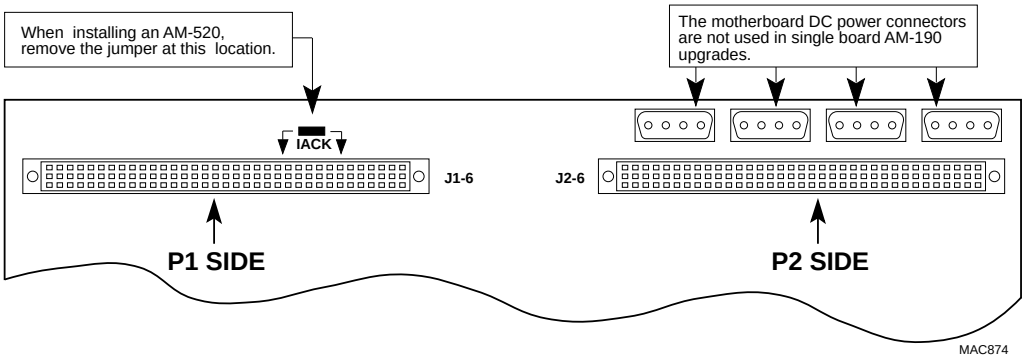

Figure C-10. AM-520 IACK Jumper Removal

There is a small right angle bracket that prevents boards (like the AM-520) from dislodging from the VME motherboard during shipment. This bracket (DWB-20254-00) is included in your installation kit and is held in place with a single phillips-head screw. The bracket is shown in Figure C-11:

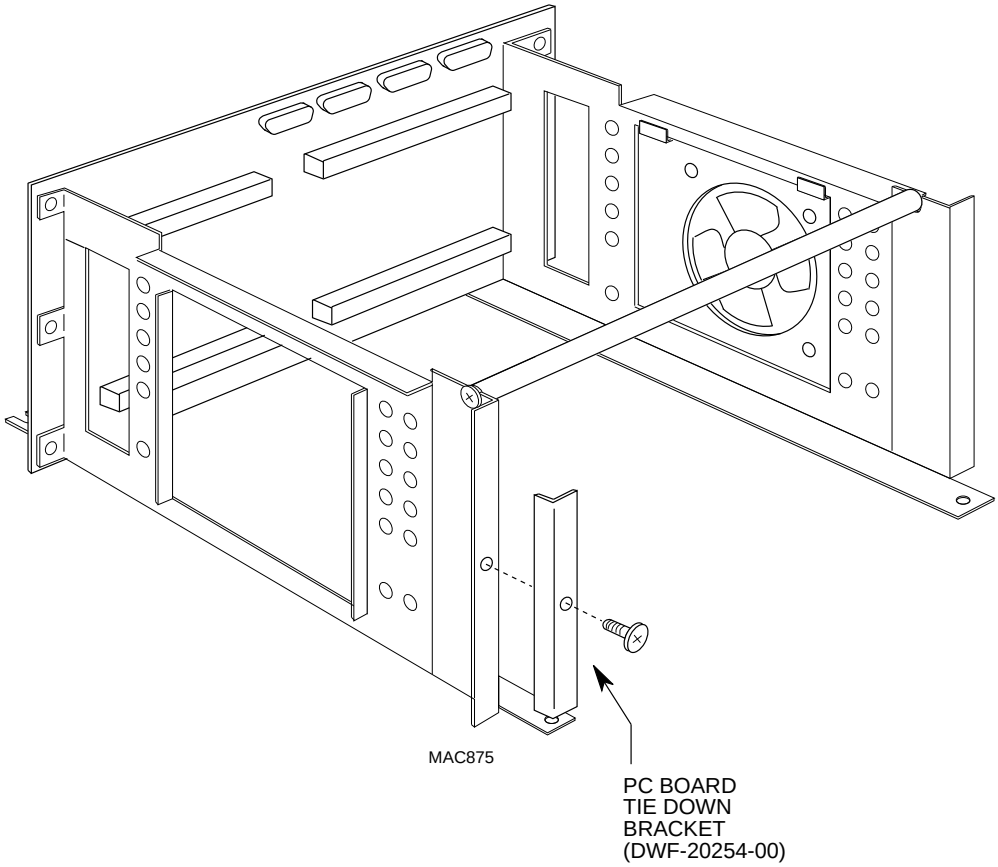

Figure C-11. PC Board Tie Down Bracket

C.7 INSTALLING THE AM-190 REAR PANEL

Before you install your I/O paddle cards onto the new rear panel, the rear panel should first be attached to both the chassis and the AM-190 board. It's much easier to properly align I/O connectors on the AM-190 board with the matching cutouts in the rear panel with the I/O boards out of your way.

To install the rear panel (DWF-20462-03), you must first place it close enough to its mounting position to allow you to connect the computer's external SCSI cable to the new rear panel. Once the external SCSI cable is attached, install the screws that secure the rear panel to the chassis, as well as the hex standoff screws that secure the AM-190 board to the rear panel and the two screws holding the A.U.I slide lock assembly to the Ethernet port. All the screw installation locations are shown in Figure C-12:

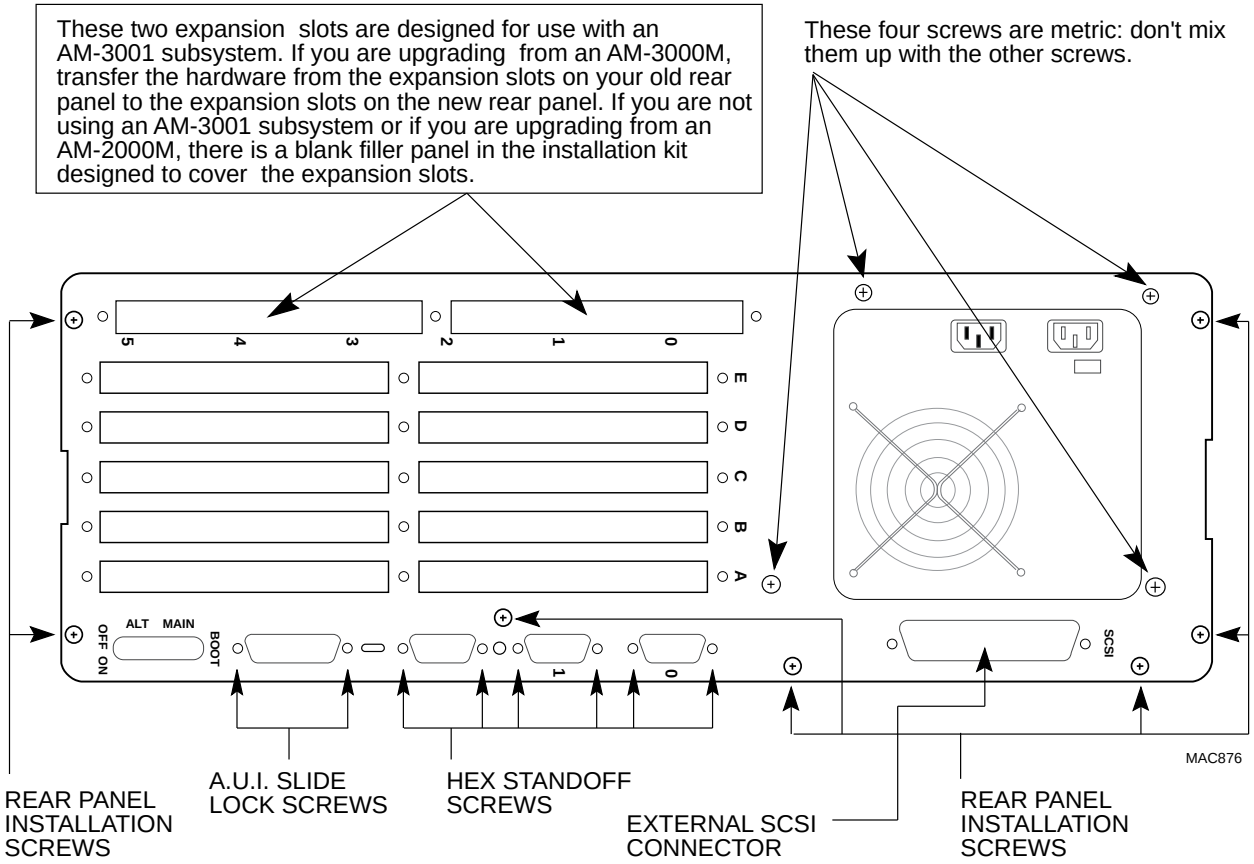

Figure C-12. Rear Panel Installation

Once the new rear panel has been installed, you can begin attaching your I/O cards to the new rear panel.

C.7.1 Reconnecting Cables to the CPU

In order to complete the hardware portion of the upgrade, there are several cables that need to be plugged into the AM-190 board. It is very important that you make all the cable connections correctly **to avoid damaging the AM-190 board**.

P4 and P5 Power Supply to CPU Board Connectors

The P4 and P5 DC power connectors you unplugged from your AM-140 or AM-145 board must be plugged into the AM-190 board. There are three DC power connectors on the AM-190 board: J9, J11, and J12. **The J11 connector is not used in pedestal chassis upgrades**. The P4 connector on the power supply plugs into the J9 connector on the CPU board. The P5 connector on the power supply plugs into the J12 connector on the AM-190 board. **Absolutely do not reverse these connections**. Carefully plug the power supply connectors into the AM-190 board and then double check your connections.

If the DC power connectors on your computer are not labeled, contact your Alpha Micro dealer or Alpha Micro's Technical Support Group for assistance. **Do not plug in the connectors until you are certain where they go.**

Front Panel Display Cable

The front panel display cable you installed earlier in the procedure plugs into connector J5 on the AM-190 board. The AM-190 board illustration in the configuration section of this document shows the location of the J5 connector as well as the connectors pin-1 designation. Plug in the display cable, being careful to maintain the proper pin-1 to pin 1 connection.

50-Pin SCSI Interface Cable

The 50-pin SCSI interface cable plugs into connector J6 on the AM-190 board. The AM-190 board illustration in the configuration section of this document shows the location of the J6 connector, as well as the connectors pin-1 designation. The cable must be routed between the left hand card cage bracket and the power supply. Once you have properly positioned the cable, plug it into the J6 connector, being careful to maintain the proper pin-1 to pin-1 connection.

AM-520 to AM-528 60-Pin Cable

The cable used in pedestal AM-2000M and AM-3000M computers that connects the AM-528 board to the AM-522 controller or AM-140 CPU board is to short to reach the AM-520 board in your upgraded computer. The PDB-04000-53 upgrade kit includes a longer cable (DWB-10178-01). Replace your old cable with the new cable, making sure to maintain the proper pin-1 to pin-1 connection. More information on making the AM-520 to AM-528 connection can be found in the *AM-520 Intelligent Controller Installation Instructions*.

60-Pin I/O Cable

If you are upgrading from an AM-2000M computer, the 60-pin cable extending from your rear panel I/O boards will plug into the J7 connector on the AM-190 board.

If you are upgrading from an AM-3000M computer, you will notice the AM-190 board has two 60-pin I/O connectors just like your old AM-140 board. The 60-pin cable connected to the J7 connector on the AM-140 board will also plug into the J7 connector on the AM-190 board. The same holds true for the J8 connector. Make sure you maintain the proper pin-1 to pin-1 connection.

The J7 connector on the AM-190 board only supports a maximum of 24 serial ports, plus one AM-324 board. If you had more than 24 serial ports attached to the J7 connector in your old AM-2000M or AM-3000M configuration, you will need to re-distribute your I/O cards between the AM-190's J7 and J8 connectors.

C.8 FINISHING UP

Reinstall the computer's side panel and pedestal feet and the hardware portion of the upgrade is complete. Return to the section earlier in this document that outlines the procedure for booting the new AM-190 board.

APPENDIX D

AM-990 SINGLE BOARD TO AM-190 UPGRADE

D.1 INTRODUCTION

The following instructions explain the process of installing an AM-190 board into an AM-990 single board computer. The PDB-04000-52 upgrade kit includes all the necessary hardware for installing the AM-190 board. If your upgrade will include the use of an ESDI disk drive, you will need to order and install the PDB-04000-53 installation kit. The PDB-04000-53 installation kit includes a motherboard and an AM-520(-10) intelligent ESDI disk controller. There is also an installation kit (PDB-04000-54) that includes a full 6-slot mother board and special DC power harness.

All AM-990 computers have power supplies capable of running an AM-190 board, along with one other VME style board (i.e., AM-350, AM-520, etc.). In fact, the majority of AM-990 single board computers have 450 watt power supplies, which can support a fully loaded 6-slot VME motherboard. However, some early model AM-990 SBC computers have power supplies which do not have the proper connectors to support a 6-slot VME configuration. If the serial number of your AM-990 computer matches one of the serial numbers in the list below, you must replace your power supply if you intend on converting to a full 6-slot configuration.

15024 15025 15026 15027 15029 15040 15045 15046
15048 15050 15051 15052 15058 15067 15073 15075
15084

D.2 REMOVING YOUR OLD CPU BOARD

1. Power down your computer, but leave your AC power cord plugged in to maintain a good earth ground.

2. To gain access to your computer's old CPU board, the top cover and left side panel must be removed as shown in Figure D-1. Use the instructions in your computer owner's manual for removing the sheet metal.

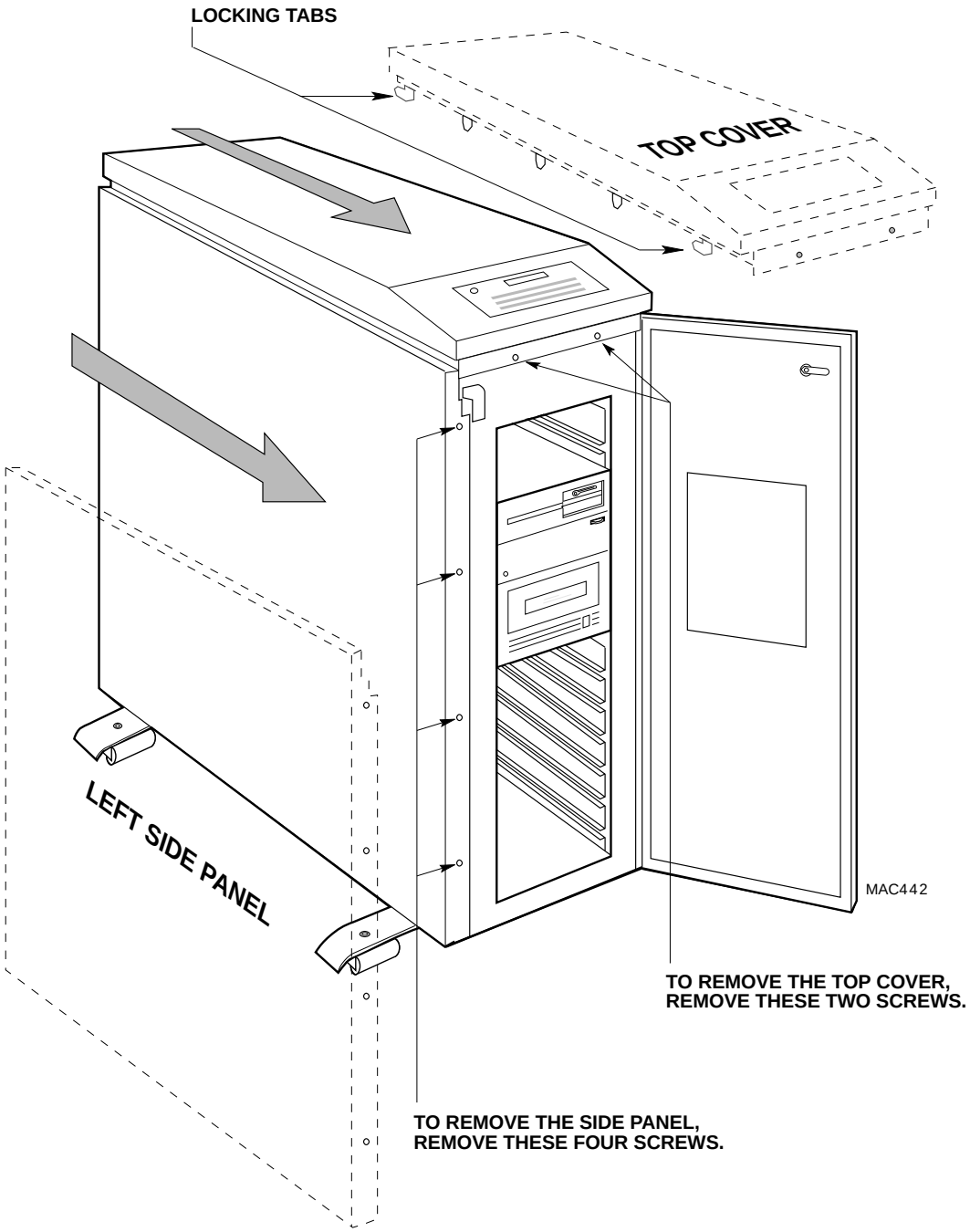

Figure D-1. AM-990 Removable Top Cover and Side Panel

3. The next step is to remove the I/O panel and paddlecard assembly located on the computer's rear panel. The I/O panel is held in place with four phillips-head screws as shown in Figure D-2. Once the screws have been

removed, disconnect the 60-pin I/O cable that connects the I/O cards to the CPU board. After the cable has been disconnected, set the I/O panel assembly aside.

4. Remove the other five screws called out Figure D-2, which hold the CPU board's mounting enclosure in place.

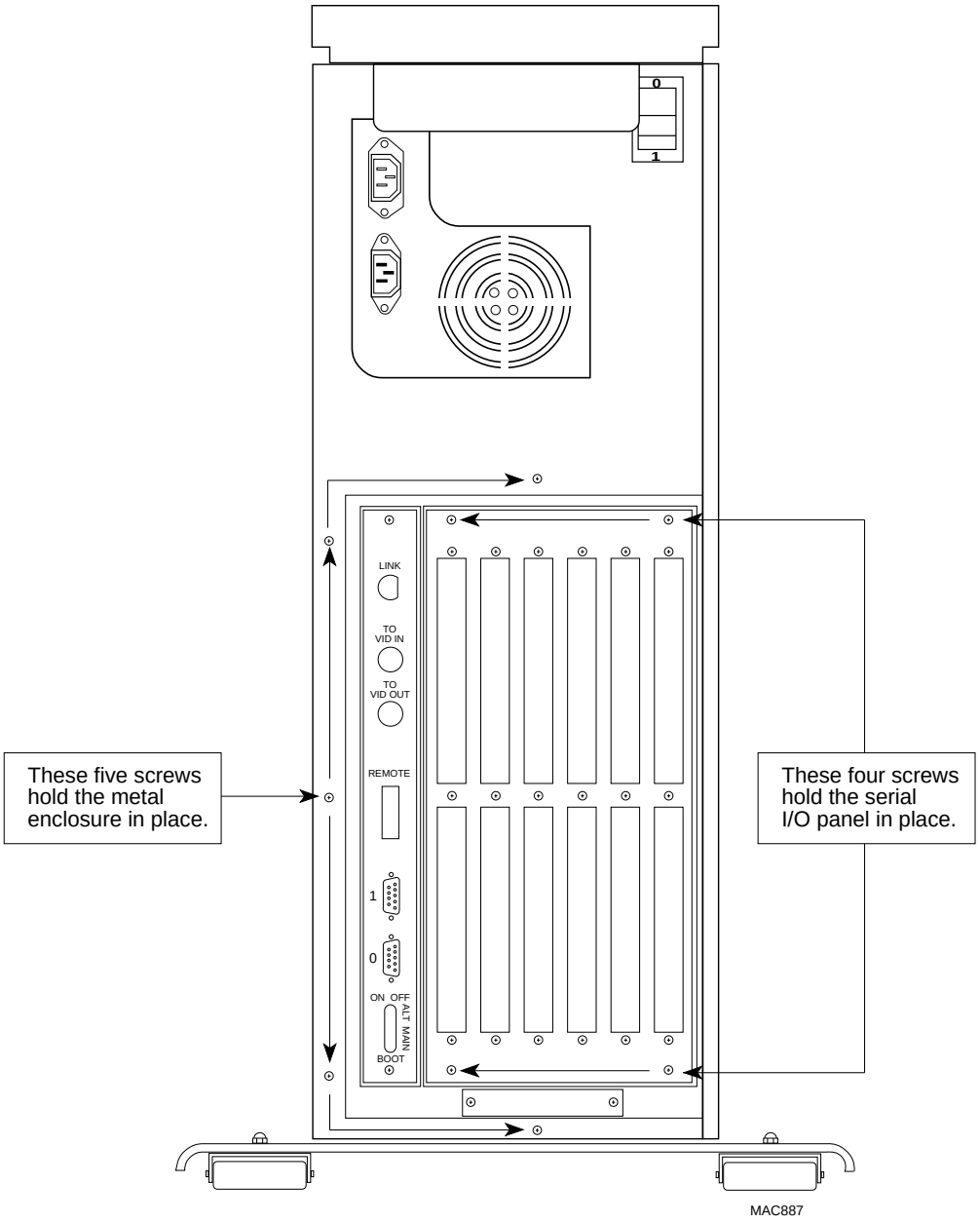

Figure D-2. AM-990 Rear Panel Screw Removal

5. The entire metal enclosure that holds your CPU and AM-528 boards must be removed. See Figure D-3. To accomplish this:

   a. Remove the 60-pin cable connecting the CPU board to the AM-528 board.

   b. Remove the cables extending between the AM-528 board and the ESDI drive (or drives).

   c. Unplug the 26-pin display cable from the CPU board and position it safely out of the way. You don't want any cables to get damaged when you remove the metal enclosure containing your old CPU board.

   d. Unplug the 50-pin SCSI interface cable from your old CPU board. Like the display cable, make sure the 50-pin cable is pulled free from the metal enclosure.

   e. Unplug the power cables extending between the power supply and the CPU board.

   f. Finally, disconnect any tie-raps or cable-clamps securing cabling to the metal enclosure you are about to remove.

6. The metal enclosure that contains your old CPU board is held in place with seven phillips head screws. Five of these screws you have already removed from the computer's rear panel. The two remaining screws are shown in Figure D-3. Once the two screws are removed, the enclosure can be removed from the chassis.

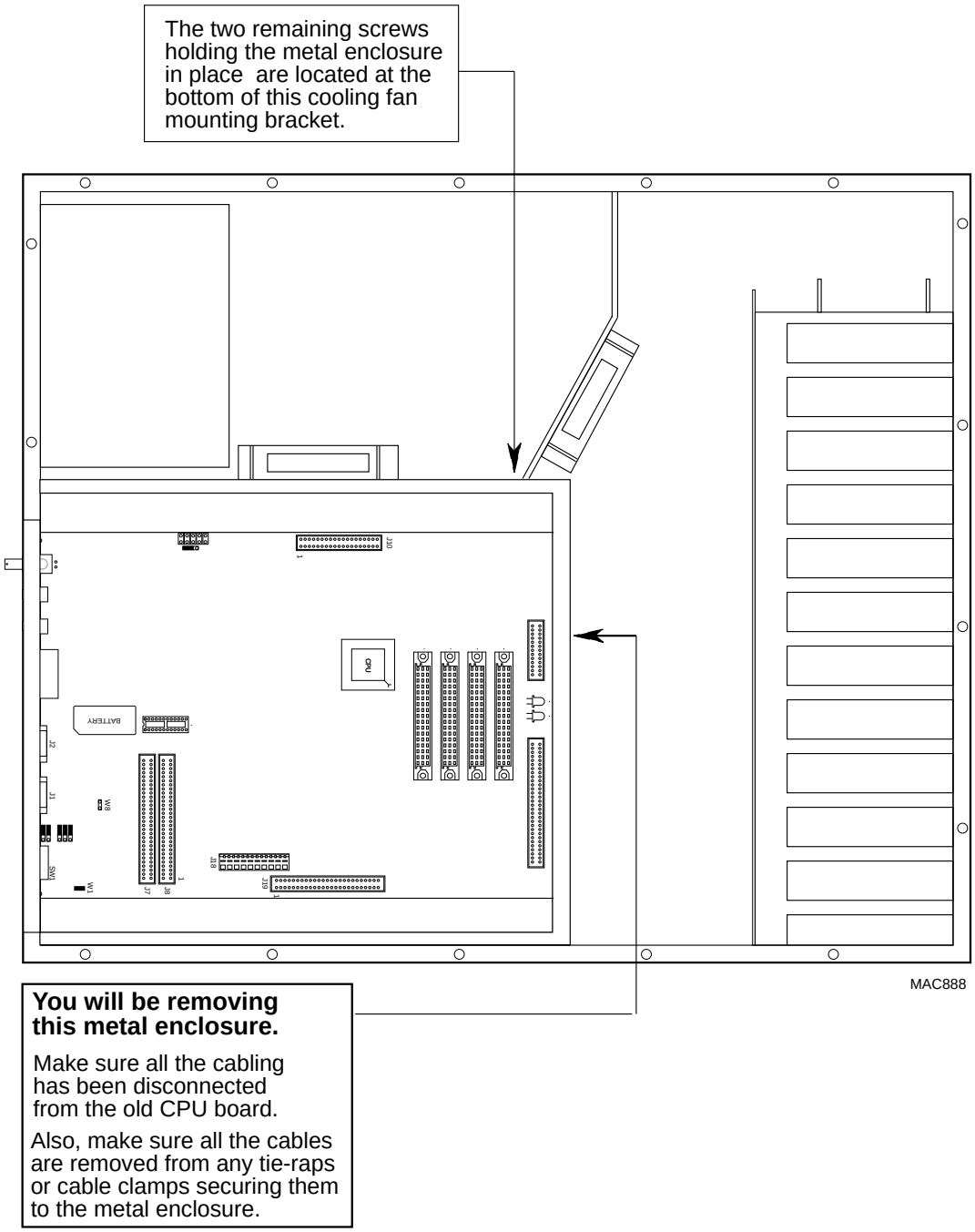

Figure D-3. Removing the Enclosure

7. To remove the enclosure, you must slide it back about one inch and then it can be lifted up and pulled from the chassis.

D.2.1 Preparing to Install the AM190 Board

A new metal enclosure (DWF-20656-00) designed for the AM-190 board is included in the upgrade kit. Before you can install the enclosure, you must complete the following steps:

1. Transfer the cooling fan from the old enclosure to the new enclosure, as shown in Figure D-4.

2. Make sure the plastic grommet material is installed in the location indicated in the illustration.

3. Install one nylon card cage guide on each of the card cage brackets as indicated in the illustration.

4. If you are installing an AM-520 board, you will need to install one additional nylon card cage guide on each of the card cage brackets in the position indicated in Figure D-4.

5. If you are installing an option two or six-slot motherboard, it will be installed as shown in Figure D-4. The motherboard is held in place with nine phillips-head screws, which use nylon washers to protect the finish on the motherboard. Also, to install the motherboard, you will need to remove the two card cage mounting brackets in order to access the screws holding the motherboard in place. After the motherboard has been installed, the card cage brackets can be reinstalled.

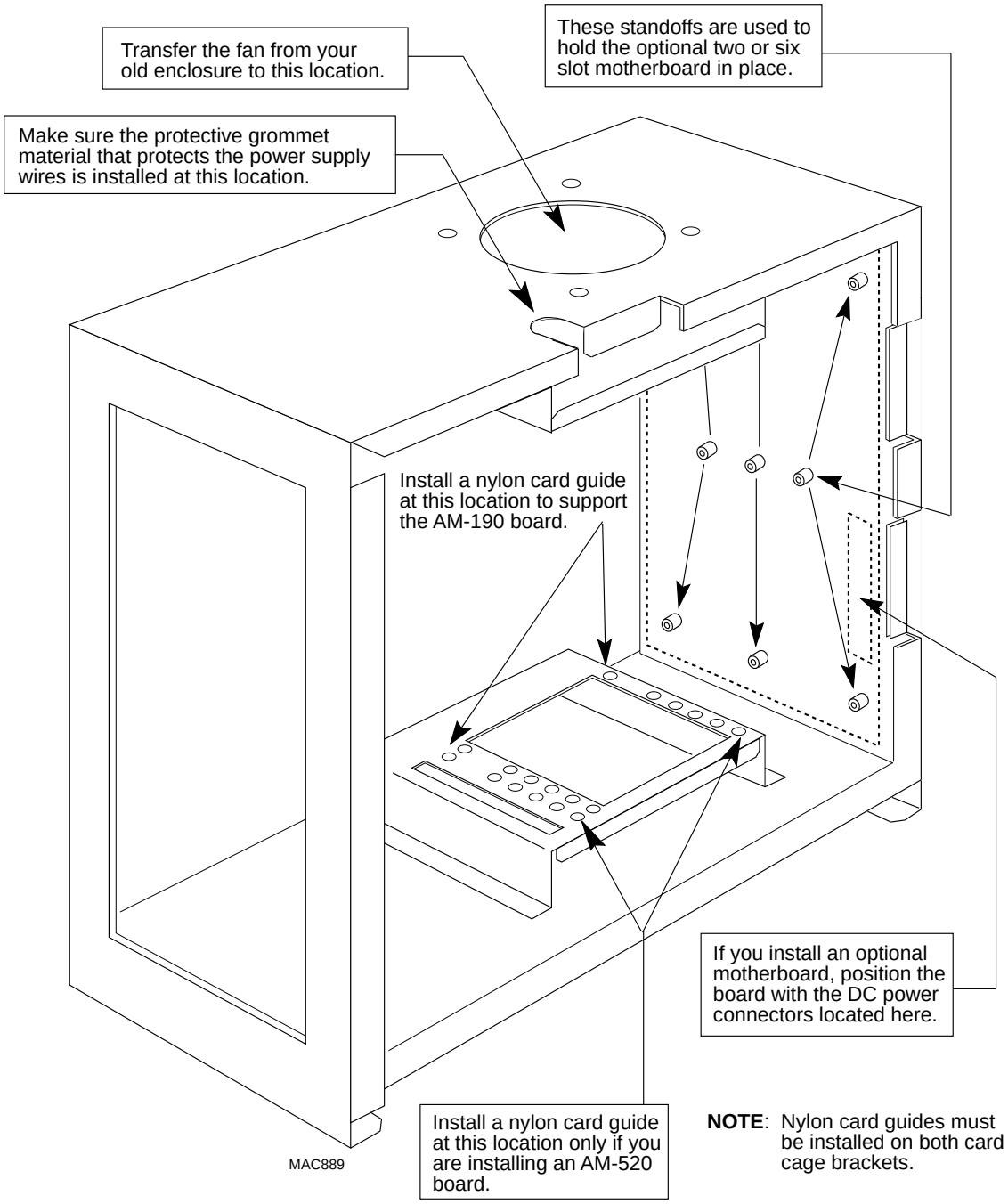

Figure D-4. AM-190 Enclosure

6. If you will be reusing your AM-528 board (which also means you will be installing an AM-520 board), the AM-528 board will need to be installed on the new enclosure as shown in Figure D-5. The upgrade kit includes a longer 60-pin cable (DWB-10178-01) for making the connection between the AM-520 board and the re-positioned AM-528 board.

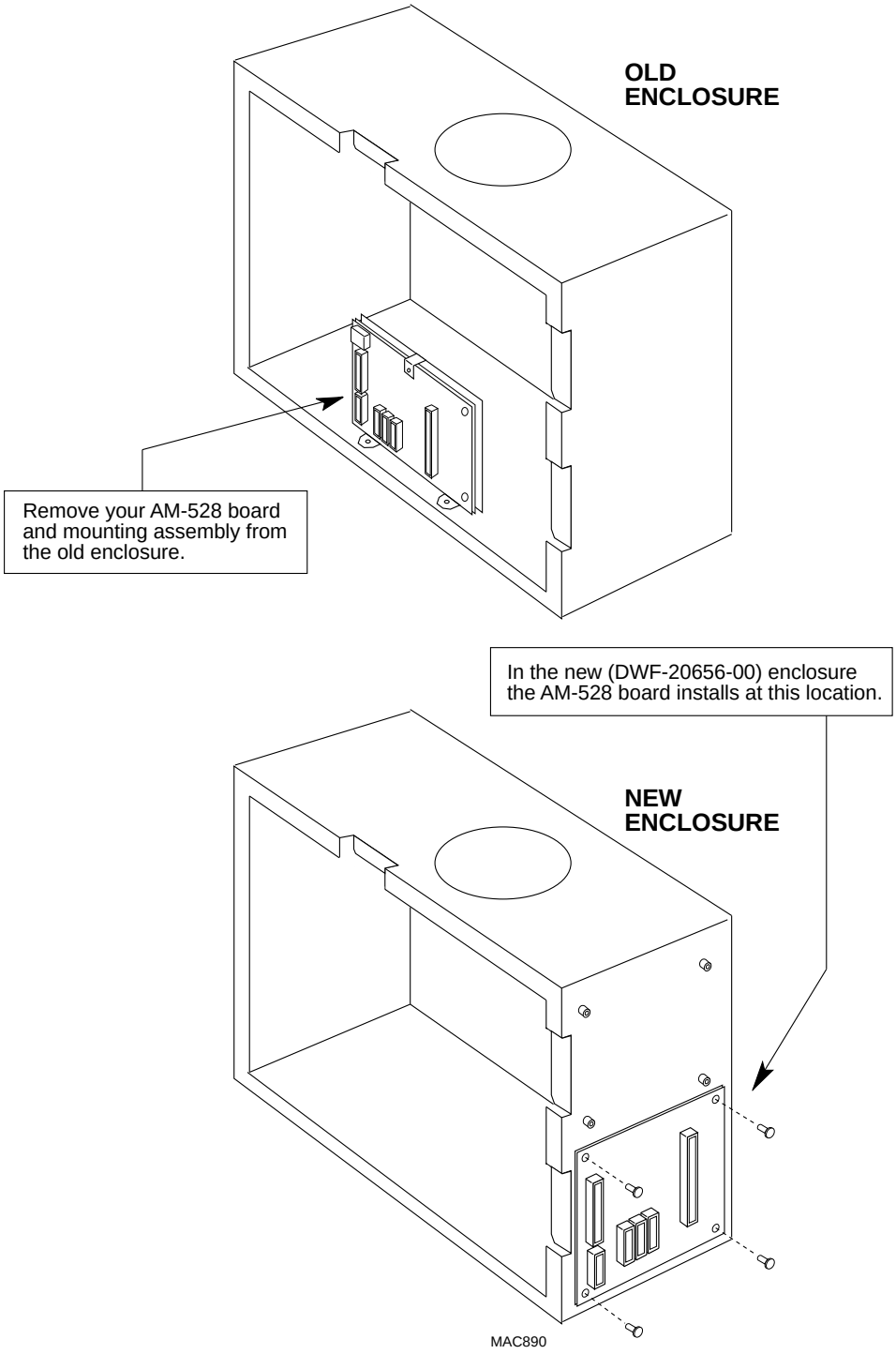

Figure D-5. AM-528 Installation

D.2.2 Installing the New Enclosure

Now that all the pre-assembly is complete, the new enclosure can be installed in the chassis. The new enclosure installs in the same position as the old enclosure. Position the new enclosure in the chassis and install the five phillips-head screws that secure the enclosure to the rear panel. Also, inside the chassis, install the two screws connecting the enclosure to the fan bracket.

Once the enclosure is installed, you need to route the 26-pin display cable and the 50-pin SCSI interface cable as shown in Figure D-6. These cables are routed along the bottom of the enclosure and are folded to achieve the proper pin-1 to pin-1 orientation with the AM-190 board. When you are installing your cables, make sure the red stripe on both cables is positioned as shown in the illustration.

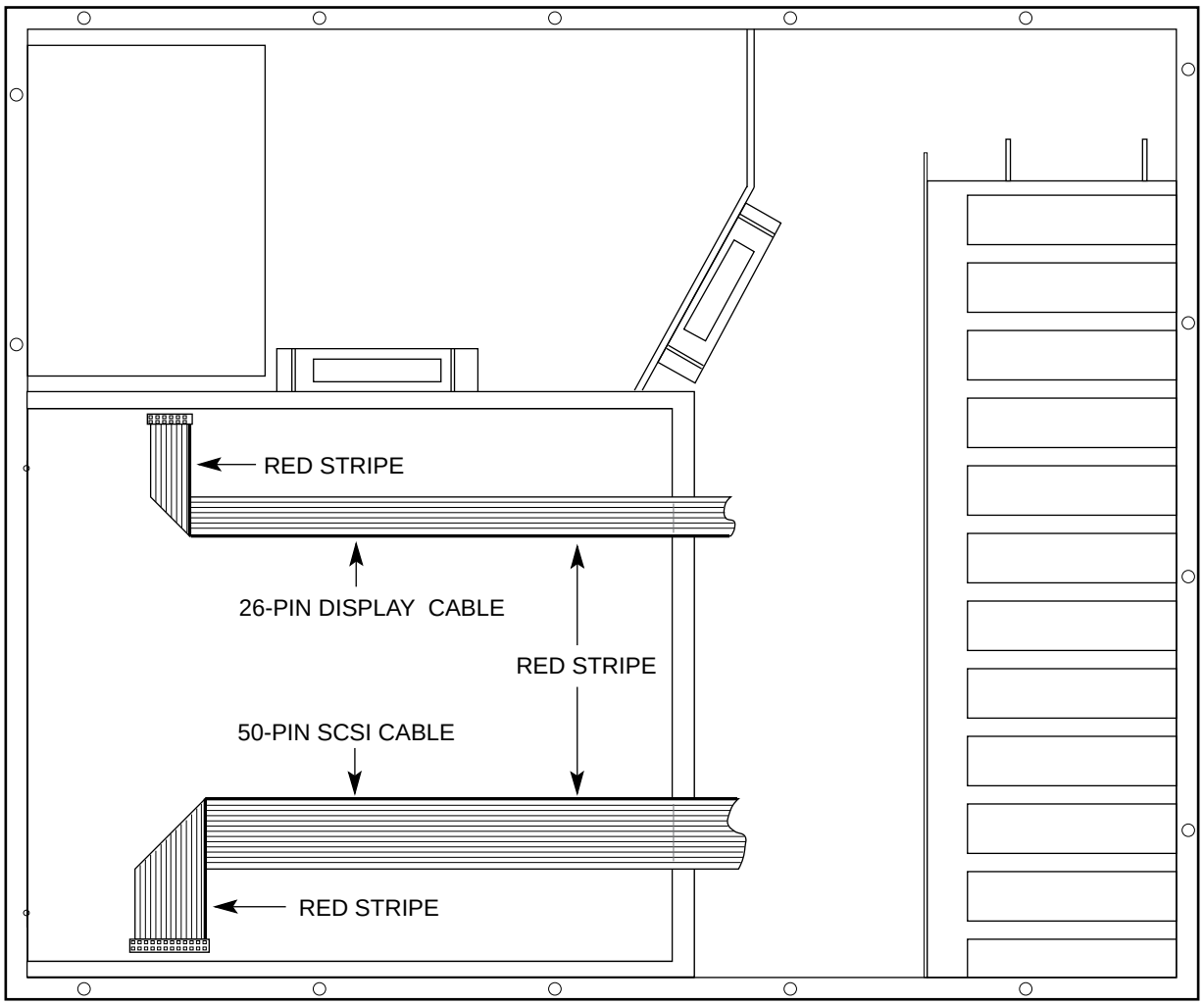

MAC891

Figure D-6. AM-990 Cable Routing

D.2.3 Installing the AM-190 Board

With the enclosure installed and the cables properly routed, the AM-190 board can now be installed. The AM-190 board is shipped with a rear panel adapter designed for use with the AM-990 chassis. So, once you confirm all the user configurable jumpers are properly set, the board can be inserted into the chassis using the following procedure:

1. Align the AM-190 board with the nylon card guides and insert it gently into the chassis.

2. If you are installing the AM-190 board in a single board configuration (no VME motherboard), you must install the terminator (DWB-00190-50) as shown in Figure D-7. This terminator (included in the installation kit) installs on the AM-190's P1 connector.

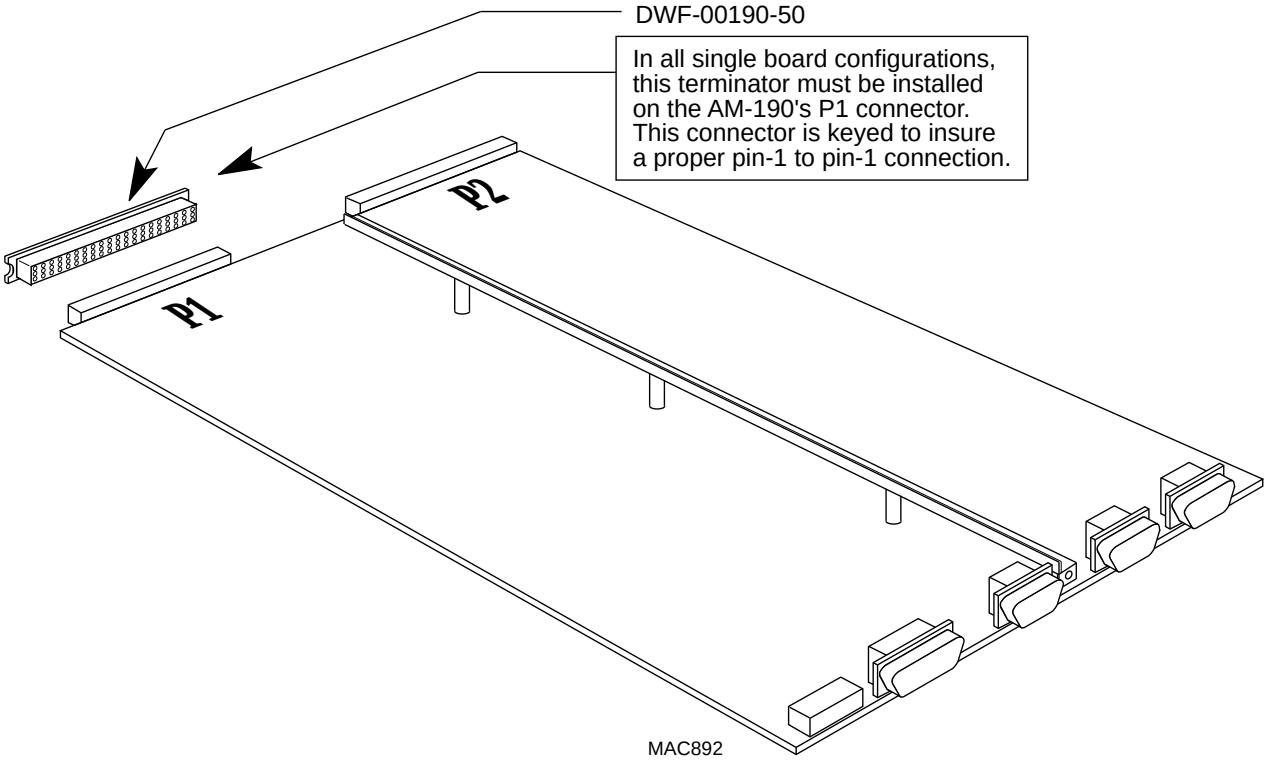

Figure D-7. AM-190 P1 Terminator

3. Install the two phillips-head screws that secure the AM-190's rear panel adapter plate to the chassis.

4. Plug the 50-pin interface cable into the J6 connector on the AM-190 board. You have already folded the cable so that it will make the proper pin-1 to pin-1 connection. Also, the AM-190 board illustration, located near the beginning of this document, shows the pin-1 location for all connectors on the AM-190 board.

5. Plug the 26-pin front panel display cable into the J5 connector on the AM-190 board. Make sure the red stripe on the cable aligns with pin-1 on the connector.

6. **Single Board Configurations**

   The power supply has three DC power connectors that must be plugged into the AM-190 board. The connector marked PS2 plugs into the J12 connector on the AM-190 board; the connector marked PS1 plugs into the J9 connector on the AM-190 board; and the connector marked PS3 plugs into the J11 connector on the AM-190 board. **Absolutely do not reverse these connections**. Carefully plug the power supply connectors into the AM-190 board and then double check your connections.

   If the DC power connectors on your computer are not labeled, contact your Alpha Micro dealer or Alpha Micro's Technical Support Group for assistance. **Do not plug in the connectors until you are certain where they go.**

7. **Full 6-Slot VME Configurations**

   If you are installing a full 6-slot motherboard, you need to disconnect the DWB-10305-00 connector from your power supply. Your PDB-04000-54 installation kit has a new power harness (DWB-10305-01) that connects between the 6-slot motherboard and the power supply. This cable has keyed connectors, which prevents them from being plugged in incorrectly.

8. The AM-520 board, which is installed only if you installed an optional two or six slot motherboard, is inserted into the top slot in the card cage. Once the board has been inserted, it is held in place with a tie-down bracket, like the one shown in Appendix C in Figure C-11.

9. After the AM-520 board has been installed, you must remove the IACK jumper from the motherboard, as shown in Figure D-8.

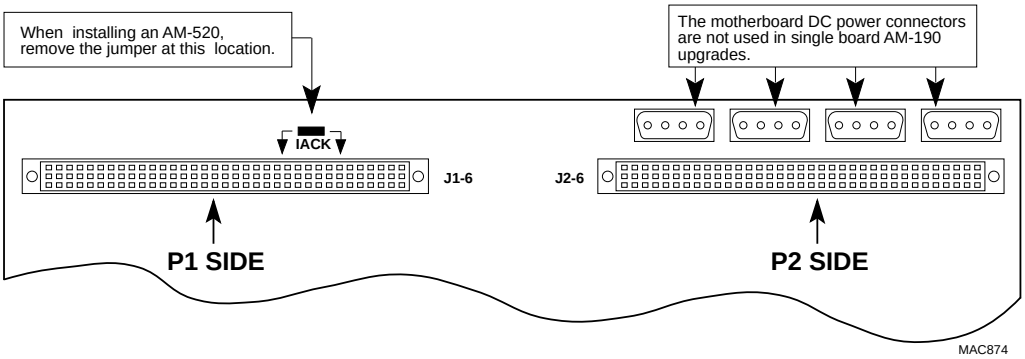

Figure D-8. AM-520 IACK Jumper Removal

10. Connect the 60-pin cable that connects the AM-520 board to the AM-528 controller. Make sure the cable is connected pin-1 to pin 1.

11. Also, don't forget to reconnect the cables that extend between the AM-528 board and the ESDI drive (or drives).

12. Next, reinstall your I/O panel, which is attached to the rear panel with four phillips-head screws. The AM-190 board has exactly the same dual I/O bus as used on the AM-3000M's AM-140 board. Both boards use the 60-pin J7 connector for primary I/O boards, and both boards use the J8 60-pin connector for auxiliary I/O boards.

The J7 connector on the AM-190 board only supports a maximum of 24 serial ports, plus one AM-324 board. If you had more than 24 serial ports attached to the J7 connector in your old AM-3000M configuration, you will need to re-distribute your I/O cards between the AM-190's J7 and J8 connectors.

D.3 FINISHING UP

Reinstall the computer's side panel and top cover and the hardware portion of the upgrade is complete. Return to the section earlier in this document that outlines the procedure for booting the new AM-190 board.